RAYCO

RG 1625A Super Jr
STUMP CUTTER



Service Manual

This manual is published by Rayco Manufacturing, Inc. for the benefit of the users of Rayco products. Rayco Manufacturing, Inc. has made every effort to ensure that this manual is correct and up to date at the time of publication. However, due to continuous improvements, Rayco Manufacturing, Inc. reserves the right to make changes in the contents, at any time, without notice or obligation.

Each machine shipped contains an Operation Maintenance & Parts Manual to familiarize the operator with the proper operating, lubricating and maintenance instructions. This helps to ensure the best possible performance and service from the machine. Read and understand all instructions before attempting to operate this machine. This manual should be readily available for reference at all times. Additional copies of this manual may be purchased from Rayco.

This Rayco Stump Cutter was designed and manufactured by Rayco Manufacturing, Inc., Wooster, Ohio. Due to continuous improvements, Rayco reserves the right to make changes in engineering, design and specifications, or discontinue manufacture, at any time, without notice or obligation.

Always have a record of the model numbers and serial numbers for your machine to specify when ordering parts. Record your machine model and serial numbers below for your personal records.

IDENTIFICATION NUMBERS		
	Model Number	Serial Number
Stump Cutter		
Engine		

Copyright © 2004 Rayco - All Rights Reserved
Printed in U.S.A.

Table of Contents

Maintenance

Systems Fluids Specifications
- Engine Oil, Engine Fuel 4
- Hydraulic Oil 4
- Lubricating Grease 4
- Fluids Refill Capacities (Approximate) 4

Drive Belts and Chains 5
Clutch 5
Maintenance Intervals 6

Charts & Specs

Clutch Replacement 28
Using a V-belt Tension Gauge 29
Electrical System & Components Troubleshooting Guide 30
Command Cut Installation 34

Trouble-Shooting

Hydraulic System 36
- How Hydraulic System Works 37
- Symptom - Loss of Hydraulic Power 37
- Symptom - Cutting Wheel Travel Weak 37
- Symptom - Machine Over-speeds When Driving Forward Down Incline 39
- Symptom - Machine Over-speeds When Driving In Reverse Down Incline 40
- Symptom - Machine Too Slow When Driving Forward 40
- Symptom - Machine Too Slow When Driving In Reverse 41
- Symptom - Self-Propel Wheels Too Slow When Driving Forward and In Reverse 41
- Symptom - Cutter Boom Drifts Down 42

Engine System 42
- Symptom - Engine Starter Does Not Turn Over 42

Hydraulic Schematic 43

Service Parts - Quick Reference 45
Specifications 46
Warranty Certificate 48

Service Bulletins 50

Copyright © 2004 Rayco - All Rights Reserved
Printed in U.S.A.

Maintenance

(Maintenance Intervals - See next section)

Systems Fluids Specifications

Engine Oil, Engine Fuel

The engine oil fill neck is located on the top front of the engine. The dipstick is located on the right rear of the engine. The fuel tank is mounted on the front right-hand side of the machine chassis.

See the *Kohler Engine Operation Manual* for engine oil and engine fuel specifications.

Hydraulic Oil

The hydraulic oil tank is the smaller tank directly behind the fuel tank. It holds 2.3 gallons. Another gallon of oil is contained in the rest of the hydraulic system.

Your Rayco Stump Cutter is filled at the factory with Shell Tellus T 46 Hydraulic Fluid. This oil is formulated to provide the proper operating characteristics in a wide range of climates. When refilling, always use the recommended oil. Failure to use the proper hydraulic oil can lower performance and shorten the life of critical components. Rayco's oil specifications address the following concerns:

high-temperature viscosity
low-temperature flow properties
viscosity lifespan
high-pressure wear characteristics
filterability
multi-metal compatibility in the presence of water

Rayco recommends the following hydraulic oils for your mechanical drive Rayco Stump Cutter:

Citgo Transguard
Mobil Mobilfluid 424
Shell Donax TD
Case Hytran Plus
Chevron 1000 THF
Pennzoil Hydra-Tranz
John Deere J-20C

If choosing an oil other than those recommended above, the following specifications should be used:

- Minimum viscosity:
  at 210° F: 52 SUS
  (at 100° C: 7.7 cSt)
- Pour point: -35° F (-37° C) or colder
- Viscosity stabilizers
- Anti-wear, Anti-foam formulation

Clean hydraulic oil is critical to achieve high performance and get long life from your hydraulic system. The oil and filter should be changed in accordance with the instructions contained in the "Maintenance Intervals" section of this manual. The hydraulic oil should be changed immediately if it appears dirty or smells burnt.

Lubricating Grease

All Rayco stump cutters are completely serviced at the factory before shipping. The operator should check all grease fittings to familiarize himself with their location and acquaint himself with the correct service schedule.

WARNING

Use the normal shutdown procedure (see the Operator Manual), before lubricating the machine.

Use only a high quality, multipurpose grease which contains 3% to 5% molybdenum disulfide. Use NLGI NO. 2 or NO. 0 grade for extremely low temperatures. Before lubricating make sure all grease fittings and the nozzle of the grease gun is clean.

Fluids Refill Capacities (Approximate)

Component or System	U.S. Gallons	Imperial Gallons	Liters
Fuel Tank	6.5	5.4	24.6
Engine Crankcase	Refer to Engine Manual		
Hydraulic System	2.0	1.7	7.6

Copyright © 2004 Rayco - All Rights Reserved
Printed in U.S.A.

Drive Belts and Chains

WARNING

Before beginning to check or adjust belts or chains: shut down the machine, ensure that all moving parts have come to a halt, remove the key from the engine start switch, and place the key in safekeeping. Extreme caution must be used to avoid death or serious injury. Stay clear of belts and chains and the cutting wheel when they are moving!

The cutting wheel is driven by three matched V-belts and a PolyChain® GT® belt via an electromagnetic clutch mounted to the engine shaft.

The Hydraulic pump is driven by a V-belt via the engine shaft.

NOTICE

To extend belt life, proper tension must be maintained. A loose belt will cause excessive cutting wheel slippage and belt failure. A belt that is too tight can cause clutch bearing, jackshaft bearing, or engine crankshaft failure.

Clutch - Burnish

The electromagnetic clutch is maintenance free. Before cutting stumps, however, the clutch mating surfaces should be burnished by the following procedure. This prevents the risk of galling, caused by prematurely imposing a full load on the new clutch.

Burnishing Procedure

The clutch should be cycled under the load of the cutter wheel. If possible, the throttle should be set at 2/3 maximum.

- Engage the clutch and, after reaching full speed, allow it to run for 5-10 seconds.
- Disengage the clutch and allow it to rest for 30 to 45 seconds before repeating the cycle. Allowing sufficient time while the clutch is disengaged to cool is very important in the procedure. Cycling without a cool down period can result in warping of the armature plate.
- The manufacturer recommends about 20 cycles for burnishing. In general, the more it can be cycled the better, but 20 cycles should be sufficient.

Additional detail on burnishing can be found on the Ogura website, www.ogura-clutch.com.

Copyright © 2004 Rayco - All Rights Reserved
Printed in U.S.A.

Maintenance Intervals

As Required

Engine Oil Level - Check 8
Fuel Tank - Fill 8
Fuel Filter - Check 8
Grease and Oil Buildup - Remove 8
Cutting Wheel - Check
Changing Teeth 9
Sharpening of Teeth 10

After First 5 Service Hours

Engine - Change Oil 11
PolyChain® - Check Tension 11
V-Belts - Check Tension 11

Every 10 Service Hours

Engine Air Cleaner - Check 11
Engine Air Intake &
Cooling Areas - Check 11
Engine Oil Level - Check 11
Engine Air Cleaner - Check 11
Fuel Tank - Fill 11
Hydraulic Oil - Check 12
Jackshaft Bearings -
Lubricate the fittings 12
Cutting Wheel
Check Teeth 13
Lubricate the Fittings 13
Walk-Around Inspection 13

After First 50 Service Hours

Hydraulic Oil Filter - Change 13

Every 50 Service Hours

Pivot Head Lower Pivot
Housing - Lubricate 14
Pivot Head Lift Cylinder
Lubricate Rod Pivot 14
Lubricate Body Pivot 14
Side Swing Cylinder
Pivots - Lubricate 14
Steer Axle - Lubricate 14
Cutting Boom Bearing
Housing - Lubricate 15
Self-propel Wheels Flange
Bearings - Lubricate 15
Hydraulic Pump V-Belt -
Check Tension 15
Cutting Wheel PolyChain® -
Check Tension 16
Jackshaft V-Belt - Check Tension 17

Every 100 Service Hours

Engine - Change Oil 18
Engine Spark Plugs - Check 18
Engine - Clean 18
Cooling Shrouds - Clean 18
Oil Cooler Fins - Clean 18
Battery - Check
Adjust Electrolyte Level 19
Clean Terminals 19
Self-Propel Wheel Engage
Pins - Apply Oil 19
Cross-Travel Cylinders
Rods - Apply Oil 20
Self-Propel Wheel Drive Chain - Check
Clean 20
Check Tension 20
Apply Oil 20
Swing Pivot - Inspect 21

Every 200 Service Hours

Engine Oil Filter - Change 21
Spark Plug - Replace 21
Clutch - Burnish 21

Every 250 Service Hours or 1 Year

Hydraulic Oil Filter - Change 22
Self-Propel Wheels Bearings -
Service 22
Engine Air Cleaner Filters - Replace 23

Every 500 Service Hours or 1 Year

Change Hydraulic Oil 23
UTE Bendix Starter - Service 24
Solenoid Shift Starter - Clean 24

Every 3 Months or 3,000 Miles

Trailer Wheel Nuts and Bolts - Tighten 25
Tire Condition - Inspect 25

Every 6 Months or 6,000 Miles

Trailer Wheels - Inspect for Cracks, Dents 25

Every 1 Year or 12,000 Miles

Front Machine Wheels & Trailer Wheel
Bearings - Clean & Repack 25

Copyright © 2004 Rayco - All Rights Reserved
Printed in U.S.A.

MAINTENANCE INTERVALS

WARNING

Before performing any maintenance, please consult the "Safety" section in the "Operator Manual" for vital information related to operating this powerful machine!

NOTICE

The maintenance items shown in this section, when found under two interval options (one in service hours versus one in strict time), should normally be performed at the interval whichever occurs first in the course of the life of the machine.

When consulting this manual regarding the longer maintenance intervals, care must be taken to not miss performing the shorter interval service requirements when the shorter intervals happen to coincide with the longer intervals, as, in such a case, it should be noted that the shorter intervals are not listed again along with the longer intervals.

The engine hour meter is a reliable tool for measuring actual service hours of the machine. When each maintenance item is performed, a record of the current service hours and the date should be made, and a note should also be made, on a regularly viewed calendar, of when the next interval that requires scheduled maintenance is to occur, based on adding the amount of time for that next interval to the time when performing that maintenance, as suits the occasion. Then, as you frequently compare the actual service hours to the record, you will be properly informed to the maintenance requirements as time passes.

The maintenance intervals listed in this "Maintenance Intervals" section of this *RG 1625A SUPER Jr. Stump Cutter Maintenance Manual* includes engine care topics. For the complete information, consult the *Kohler Engine Operation Manual.*

Rayco has attempted to accurately predict maintenance intervals for this machine. However, due to varying environmental operating conditions such as intense dust or moisture, or due to heavier usage, your machine may require certain maintenance at more frequent intervals than those given in this manual. Thus, whenever variance is found through the actual usage of this machine, the published interval should be disregarded and a more frequent interval applied.

Copyright © 2004 Rayco - All Rights Reserved
Printed in U.S.A.

As Required

Engine Oil Level - Check

NOTICE

Check only when the engine is in a level position.

Follow the directions found in the *Kohler Engine Operation Manual.*

Fuel Tank - Fill

WARNING

Gasoline is highly combustible. Do not spill it on the engine. Let the engine cool before refueling. Do not smoke or allow any hot objects nearby when refueling.

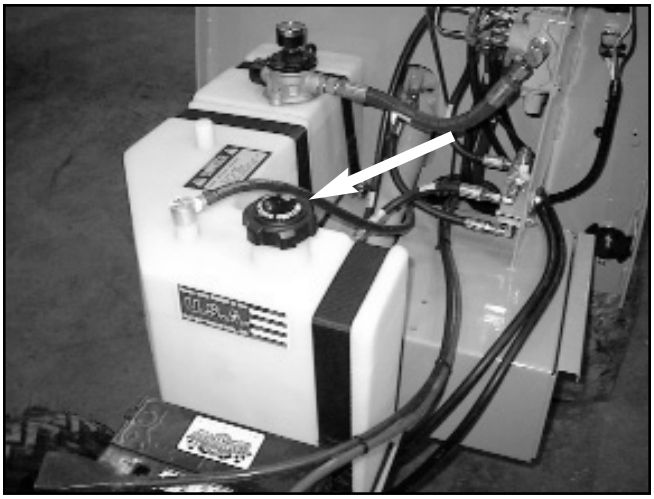

The fuel tank is the larger tank behind the battery. Remove the fuel cap. Carefully fill the tank, and replace the cap.

See "System Fluids Specifications" in this "Maintenance" section for more information.

Fuel Filter - Check

Follow the directions found in the *Kohler Engine Operation Manual.*

Either of the following fuel filters will function as a suitable replacement:

- Rayco part no. 730039
- Kohler part no. 25-050-03
- AC part no. GF61
- WIX part no. 33032
- PRO part no. GF61M

Grease and Oil Buildup - Remove

NOTICE

Accumulated grease and oil on a machine is a fire hazard. Remove such debris with steam cleaning or high pressure water.

For cleaning with a hot water cleaning device, use a spray steam with a pressure not exceeding 426 psi (2982 kPa) to prevent damage to painted areas of the components. The use of sol vents or strong cleaners should be avoided for the first 90 days. Strong cleaners will destroy paint until the paint is fully cured.

Wipe all fittings, caps, and plugs before servicing.

Keep a close watch for leaks. If leaking is observed, find the source, and correct the leak.

Check the fluid levels more frequently than the recommended periods if leaking is suspected or observed, until the problem may be corrected.

Copyright © 2004 Rayco - All Rights Reserved
Printed in U.S.A.

Cutting Wheel - Check

Among the most critical elements of the stump cutter are the cutting teeth. They are also the most subject to damage and wear, as in the course of cutting stumps they may encounter a numerous assortment of abrasives and objects in the stump's environment, such as dirt, stones, and occasionally a large rock or buried scrap. The loss of and wear of teeth can significantly impair the efficiency of a stump cutter and also result in overexposure of other teeth, resulting in premature failure or wear. Therefore it is important to make frequent observation of the condition of all of the cutting teeth, and replace any missing and significantly worn teeth, as soon as feasible.

Read all of the instructions which follow before beginning to change cutting teeth.

Changing Teeth

WARNING

Block or otherwise securely support the cutting boom when changing teeth.

NOTICE

Read all of the following instructions before beginning to change cutting wheel teeth.

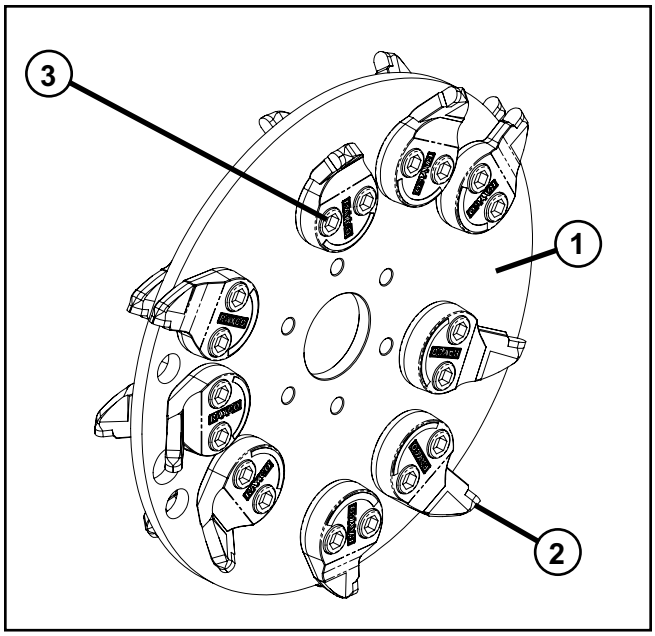

1. Remove the socket head bolts (3) from the teeth (2). (Use the 1/2" hex key provided with the machine.)
2. Clean all dirt from the cutting wheel (1) and teeth (2).
3. Check the cutting wheel for cracks. Replace the wheel if it is cracked.
4. Carefully select and insert new cutting teeth, properly positioning each tooth as shown in the diagram on the next page.
5. Bolt the teeth to the cutting wheel (but not tightly until the pattern has been double-checked).
5. After setting each tooth pair, tighten the socket head bolts to 135 to 145 foot-pounds.

Copyright © 2004 Rayco - All Rights Reserved
Printed in U.S.A.

MAINTENANCE INTERVALS

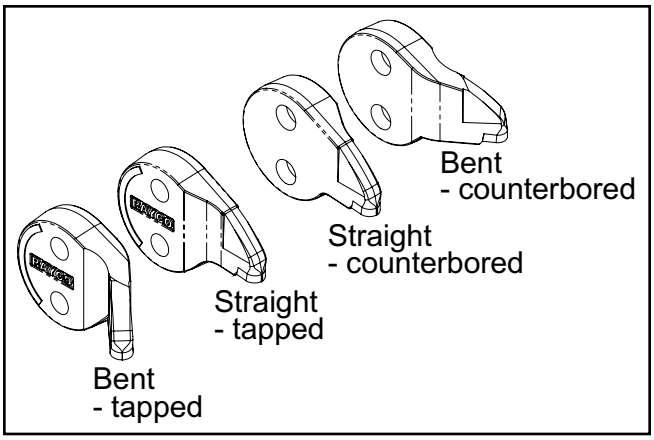

There are four types of Superteeth, as shown in the above diagram. The counterbored teeth are on one side of the cutting wheel, the tapped teeth on the opposite side. The tips of the bent teeth will always point away from the cutting wheel.

NOTICE

The following illustration represents the exact location required for positioning each tooth. Please follow very closely for good cutting wheel performance.

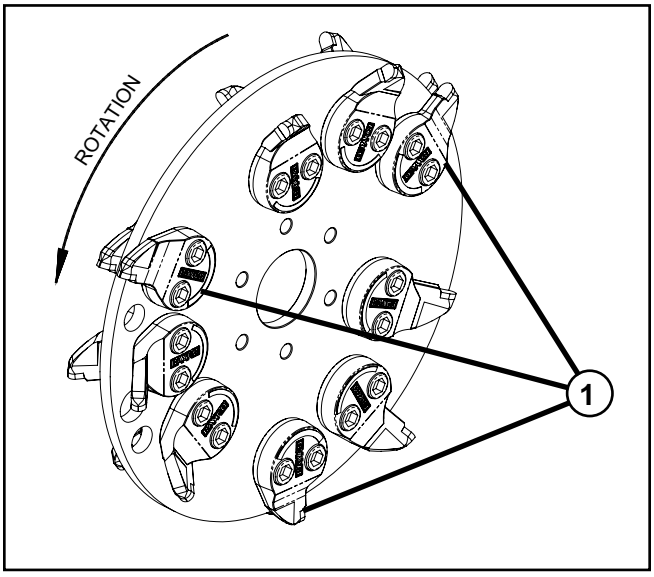

To mount the cutting teeth there must be 3 straight teeth (1) on each side of the wheel. These teeth should be mounted on the outer most set of holes on each side. The remainder of the teeth are bent.

NOTICE:

Do not hammer the tip of a tooth. Due to the super hardness of the tooth, it is brittle and may chip from such treatment.

Replacement teeth are available from your Rayco dealer or direct from Rayco. Refer to the Parts manual for part numbers.

Sharpening of Teeth

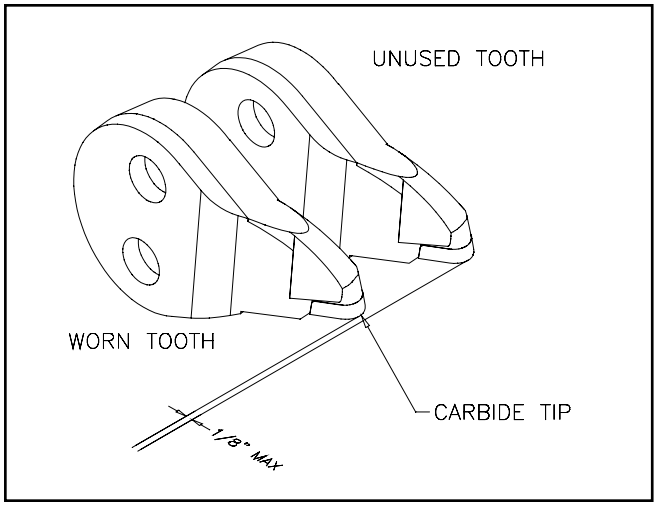

Do not allow any tooth to wear too much before sharpening. Discard any tooth that has lost more than 1/8" of original bite.

Remove, from the cutting wheel, the tooth for sharpening.

NOTICE

Sharpening cemented carbide cutting teeth requires a special process. Have your teeth sharpened only by a qualified machinist for obtaining a proper edge and to avoid injury.

Tooth Sharpening Guidelines

1. Obtain an unused tooth for comparison.
2. Discard any tooth that has lost more than 1/8" of original bite, whether lost through usage or grinding.
3. Grind off a minimal amount from the end, just enough to restore the original taper and radius on the end. The end of the cemented carbide tip and the end of the steel shank should be flush after grinding.

Copyright © 2004 Rayco - All Rights Reserved
Printed in U.S.A.

After First 5 Service Hours

Engine - Change Oil

Follow the directions found in the *Kohler Engine Operation Manual.*

PolyChain® - Check Tension

Check and adjust as described in the “Every 50 Service Hours” interval in this “Maintenance Intervals” section.

V-Belts - Check Tension

Check and adjust the pump and jackshaft v-belts as described in the “Every 50 Service Hours “ interval in this “Maintenance Intervals” section.

Every 10 Service Hours

Engine Air Cleaner - Check

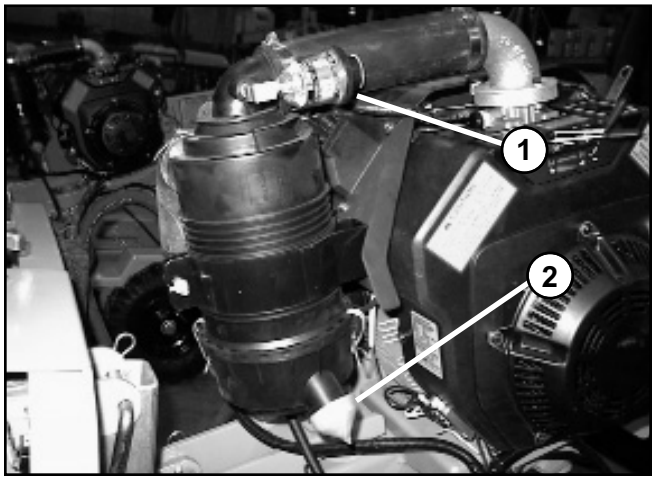

1. Check the service gauge (1).
   - Clean (or replace) the filter elements if needed (when the red flag of the service gauge is fully visible). After cleaning or replacing the filter elements, reset the service gauge by pressing in the tab on the end.
   - Replace the safety cartridge if needed.
2. Discharge the dust ejector valve (2).

Engine Air Intake & Cooling Areas - Check

Follow the directions found in the *Kohler Engine Operation Manual.*

Engine Oil Level - Check

Follow the directions found in the *Kohler Engine Operation Manual.*

Fuel Tank - Fill

Follow the directions given in the “As Required” section of this “Maintenance Intervals” section.

Copyright © 2004 Rayco - All Rights Reserved
Printed in U.S.A.

MAINTENANCE INTERVALS

Hydraulic Oil - Check

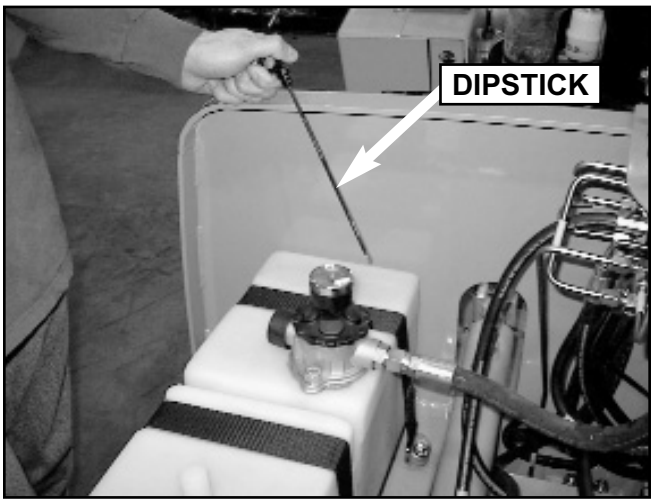

NOTICE:

Replace oil if it smells burnt or appears to be dirty.

Use only clean, fresh hydraulic oil, free of bubbles. (Bubbles indicate trapped air.)

The hydraulic oil tank (reservoir) is the smaller tank directly behind the larger tank. The oil level is determined either by pulling out the dipstick, which is part of the oil filter assembly on top of the reservoir, or by a visual check. The oil level should be 6” to 7” from the bottom of the dipstick, or 1” to 2-1/2” from the top of the reservoir. Add oil if it is below the level indicated.

Check the oil level only when the engine is cold, and with the machine on level ground.

Re-fill the hydraulic oil tank

1. Clean all surrounding debris and dirt off of the tank fill opening area. (Hydraulic fluid must be kept completely clean!)
2. Unscrew the filter cap and pull out the filter.
3. Fill the tank until the oil level shows 6” to 7” from the bottom of the dipstick.
4. Replace the filter and cap.

Jackshaft Bearings - Lubricate the fittings

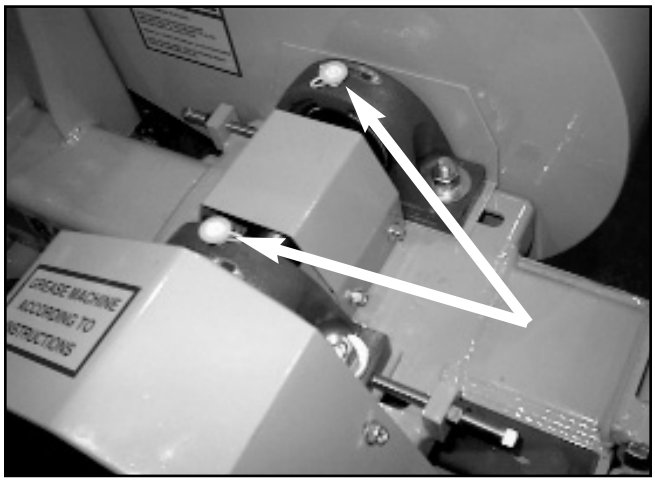

NOTICE

Shoot grease in slowly, and carefully prevent damage to the bearing seals. Use extra caution when using a high pressure or high volume grease gun.

Copyright © 2004 Rayco - All Rights Reserved
Printed in U.S.A.

Cutting Wheel - Check Teeth

Check the cutting wheel for missing, broken, or signifiicantly worn teeth. Change any such teeth that are found, according to directions given in the “As Required” section.

Lubricate the Fittings

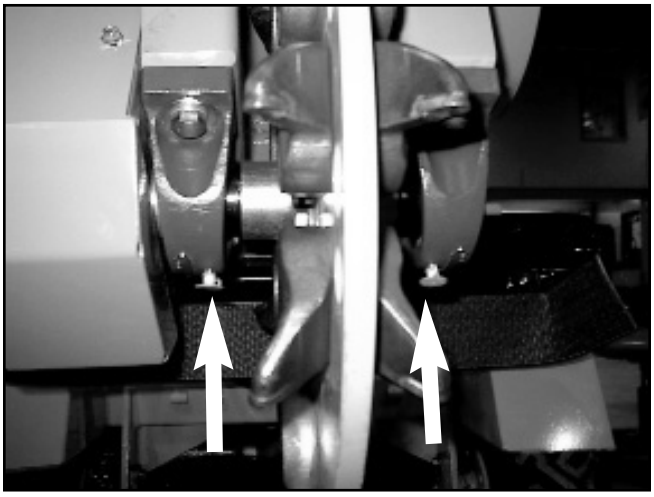

1. Lubricate the two fittings (one on each cutting wheel bearing).

NOTICE

Shoot grease in slowly, and carefully prevent damage to the bearing seals. Use extra caution when using a high pressure or high volume grease gun.

Walk-Around Inspection

1. Inspect the cutting boom cylinders and linkage for damage or excessive wear. Repair if damaged.
2. Inspect and remove any chip or residue buildup in and around the engine.
3. Inspect the hydraulic system for leaks. Inspect the tank, hoses, tubes, plugs, joints, and fittings. Correct any leaks.
4. Be sure the covers and guards are firmly in place. Inspect for damage.
5. Inspect the tires and rims for damage and inflation. Inflate if needed. Replace worn tires.
   - Inflate all tires to 50 PSI (3.4 bar)
6. Inspect for loose or missing fasteners. Tighten or replace.
7. Inspect the belts and PolyChain® for wear. Replace if frayed or cracked.

After First 50 Service Hours

Hydraulic Oil Filter - Change

Change the hydraulic oil filter as described in the “Every 250 Service Hours or 1 Year” interval in this “Maintenance Intervals” section.

Copyright © 2004 Rayco - All Rights Reserved
Printed in U.S.A.

Every 50 Service Hours

Pivot Head Lower Pivot Housing - Lubricate

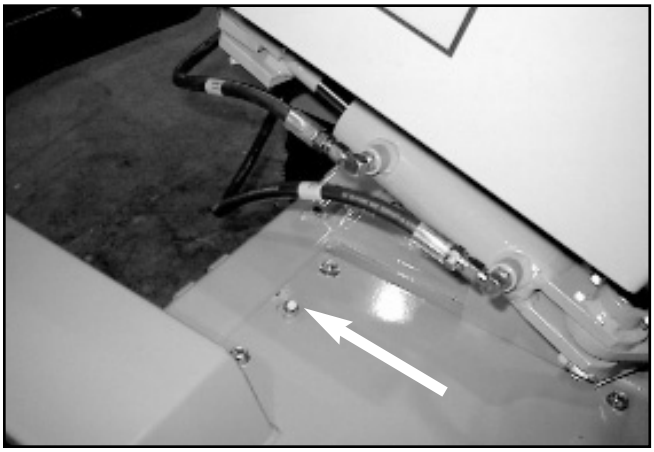

Lubricate the grease fitting on the cutting boom pivot head lower pivot housing (under the machine) by lubricating the fitting on the lube hose on top of the deck plate.

Pivot Head Lift Cylinder

Lubricate Rod Pivot

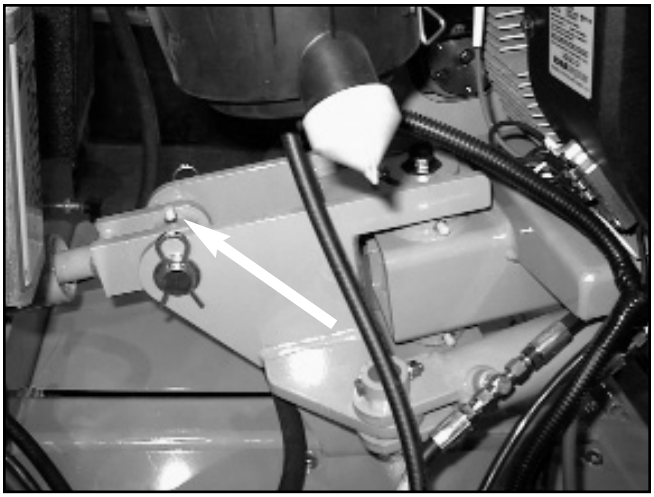

Lubricate the grease fitting on the cylinder rod pivot.

Lubricate Body Pivot

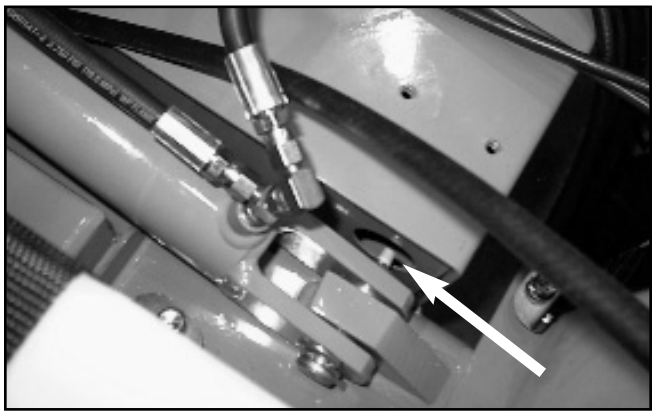

Lubricate the grease fitting on the cylinder body pivot pin. This can be accessed from inside the tool box drawer.

Side Swing Cylinder Pivots - Lubricate

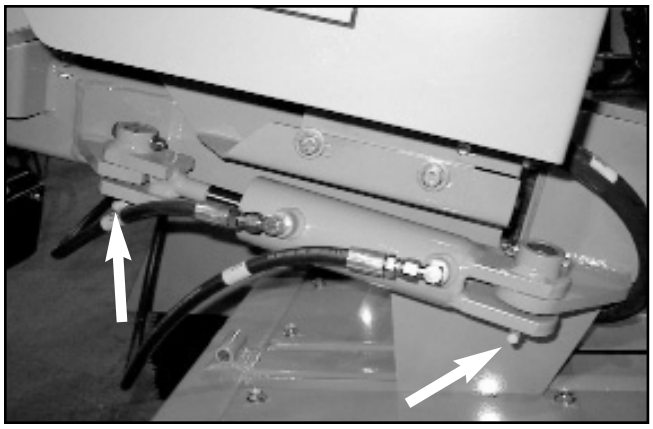

Lubricate the four total grease fittings on the two cutting boom side swing cylinder pivots.

Steer Axle - Lubricate

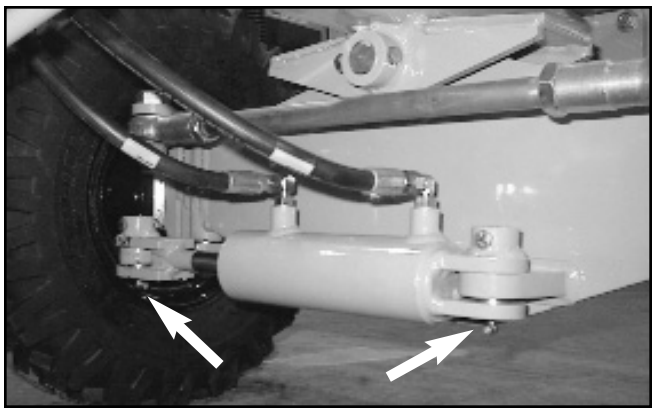

Lubricate the two grease fittings on the steer axle cylinder pins.

Copyright © 2004 Rayco - All Rights Reserved
Printed in U.S.A.

Cutting Boom Bearing Housing - Lubricate

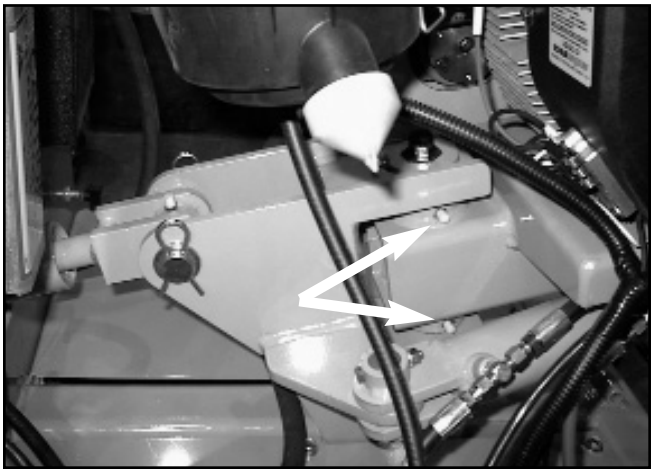

Lubricate two fittings on the bearing housing at the pivoting end of the cutting boom.

Self-propel Wheels Flange Bearings - Lubricate



NOTICE

Shoot grease in slowly, and carefully prevent damage to the bearing seals. Use extra caution when using a high pressure or high volume grease gun.

Hydraulic Pump V-Belt - Check Tension

WARNING

The machine must be shut down when checking and adjusting belt tension.

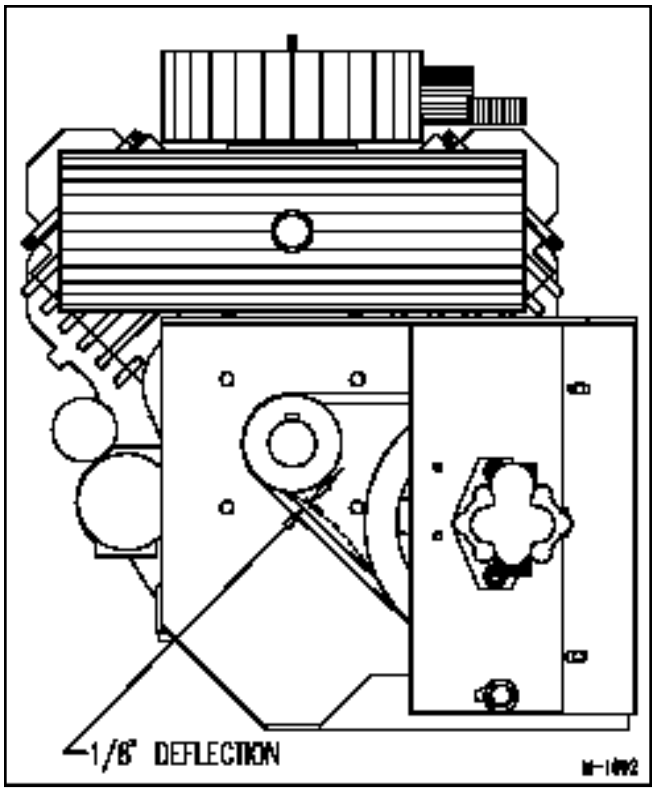

With the pump guard removed, deflect the belt at midway of the span, using firm hand pressure. It should deflect approximately 1/8" when properly tensioned.

Copyright © 2004 Rayco - All Rights Reserved
Printed in U.S.A.

MAINTENANCE INTERVALS

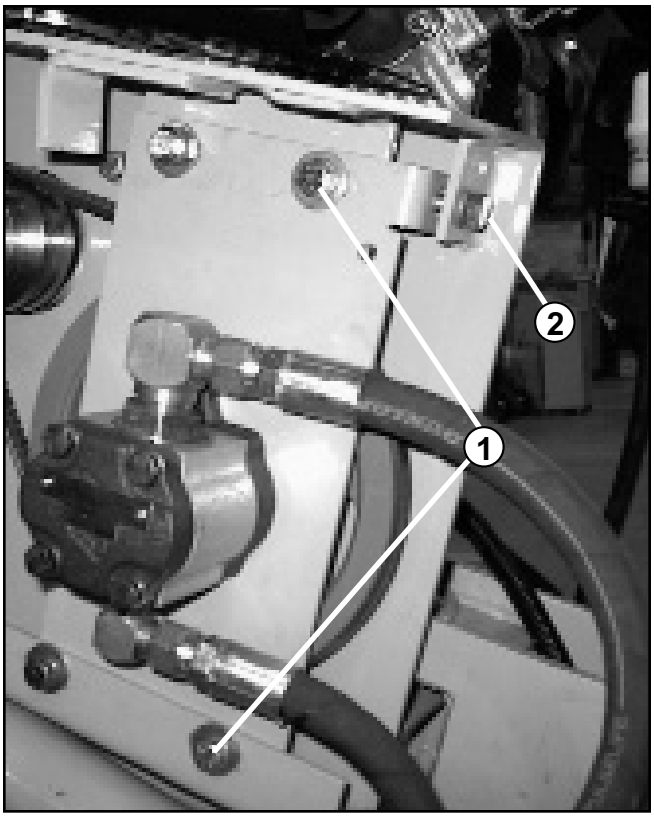

To tighten belt

1. Remove the pump guard and sheave guard.
2. Loosen the four pump bracket bolts (1).
3. To tighten the belt, tighten the adjusting screw (2).
4. Check the tension, and repeat until the proper tension is obtained.
5. Re-tighten the four pump bracket bolts (1).
6. Re-mount the pump guard and sheave guard. Firmly tighten all screws.

Cutting Wheel PolyChain® - Check Tension

WARNING

The machine must be shut down when checking and adjusting belt tension.



Using a belt gauge, check PolyChain® tension by depressing PolyChain® at the center of the span.

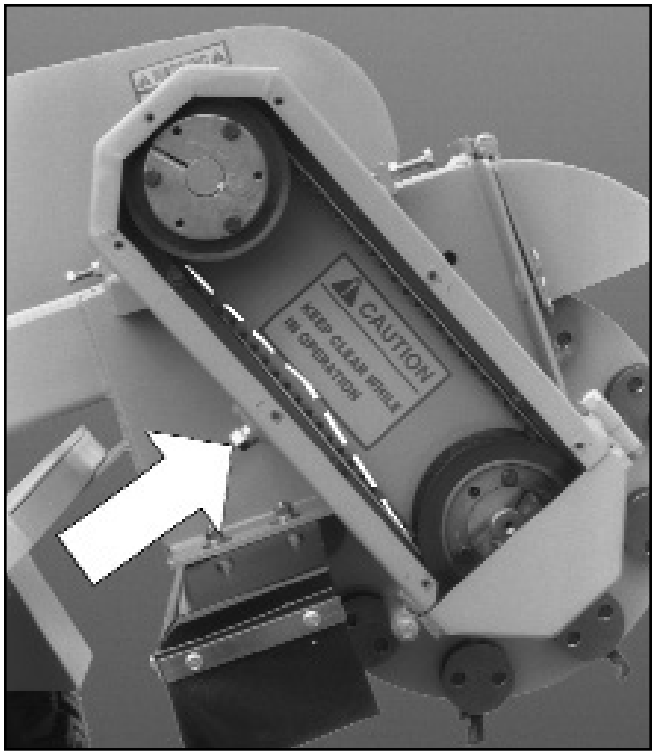

1. (The PolyChain® guard cover need not be removed, but is here shown removed for illustrative purpose only.) The cutting wheel must be free to rotate (eg. not resting on ground). The belt gauge may be inserted into the hole in the PolyChain® guard. Remove the hole plug in the guard, and insert the large “O” ring end of the belt gauge.

   The belt should deflect 1/4" when 15-18 lbs is applied. (Use 18-20 lbs when installing a new belt.) If the tension is acceptable, replace the guard hole plug, and ignore steps 2-7. If the tension is too low, follow steps 2-7.

Copyright © 2004 Rayco - All Rights Reserved
Printed in U.S.A.

MAINTENANCE INTERVALS

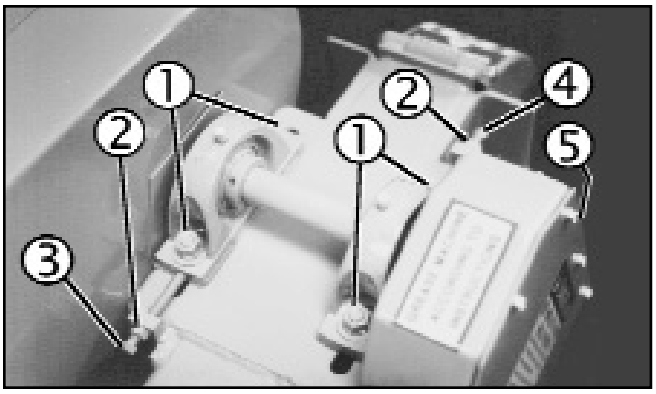

2. Loosen the two bolts (1) holding each bearing, enough to allow the bearings to slide easily.
3. Loosen the lock nuts (2) on the two bearing jacking screws (3) & (4).
4. Back-off the jacking screw (3) one full turn.
5. Tighten the jacking screw (4) one full turn.
6. Check the PolyChain® tension. If more tension is necessary, repeat steps 4 and 5, and recheck the tension.
7. When the tension is correct, tighten the bearing bolts and jacking screw lock nuts, and reinsert the plug into the hole in the PolyChain® guard.

NOTICE

Whenever the PolyChain® is adjusted, the jackshaft v-belts tension must be readjusted. (See the following instructions.)

PolyChain® Component Wear Inspection

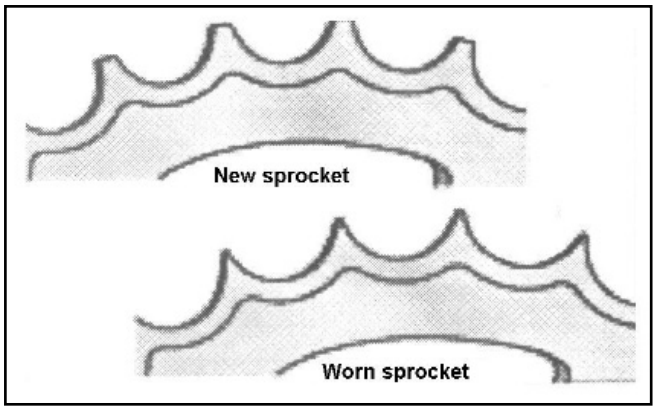

Jackshaft V-Belt - Check Tension

WARNING

The machine must be shut down when checking and adjusting belt tension.

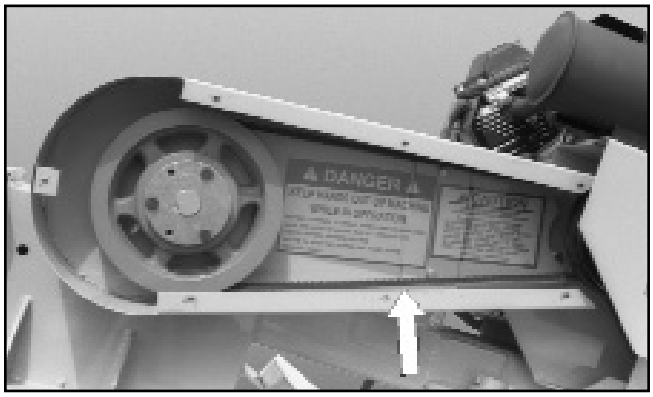

1. Remove the belt guard cover.
2. Check the belt tension. The belt is properly tensioned when the belt can easily be deflected in the center of the span one belt thickness, using your forefinger. If tension is acceptable, proceed to step 7. Otherwise, proceed to step 3.

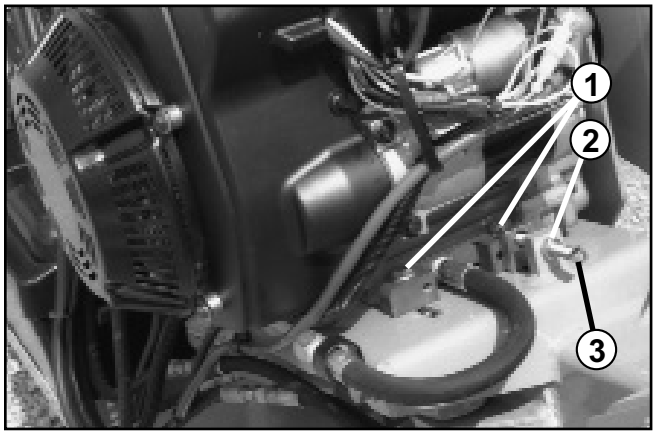

3. Loosen the four bolts (1) which secure the engine to the cutting boom.
4. Loosen the jam nut (2) on the engine adjusting nut. Turn the engine adjusting nut (3) clockwise to tighten the belts to the proper tension.
5. Check the belt tension again. If it is too loose, repeat step 4 and check again until it is properly set.
6. Retighten the engine bolts and locknut.
7. Replace the belt guard cover.

Copyright © 2004 Rayco - All Rights Reserved
Printed in U.S.A.

Every 100 Service Hours

Engine - Change Oil

Follow the directions found in the *Kohler Engine Operation Manual.* Change oil more frequently if directed, depending on how you use your machine.

Engine Spark Plugs - Check

Follow the directions found in the *Kohler Engine Operation Manual.*

Engine - Clean

Follow the directions found in the *Kohler Engine Operation Manual.*

Cooling Shrouds - Clean

Follow the directions found in the *Kohler Engine Operation Manual.*

Oil Cooler Fins - Clean

Follow the directions found in the *Kohler Engine Operation Manual.*

Copyright © 2004 Rayco - All Rights Reserved
Printed in U.S.A.

Battery - Check

WARNING

Always wear protective clothing and eyeglasses when working with battery.
For further important battery safety information, consult the *Kohler Engine Operation Manual.*

Adjust Electrolyte Level

1. Raise the hood.
2. Remove each cap carefully by prying with a screwdriver.
3. Electrolyte level should be 1/4" to 1/2" above the metal plates (just touching the bottom of the plastic fill neck). Add distilled water as needed.
4. Replace both caps.

Clean Terminals

1. Raise the hood.
2. Remove the black negative (-) cable.
3. Clean the terminal and clamp of any oxidation buildup with a stiff wire brush. (Stroke the brush away from your body to avoid hazardous particles.)
4. Apply a light coat of petroleum jelly around the base of the terminal.
5. Replace the cable.
6. Repeat the same procedure for the red positive (+) cable.

Self-Propel Wheel Engage Pins - Apply Oil



Apply SAE 30 engine oil.

Copyright © 2004 Rayco - All Rights Reserved
Printed in U.S.A.

MAINTENANCE INTERVALS

Cross-Travel Cylinders Rods - Apply Oil

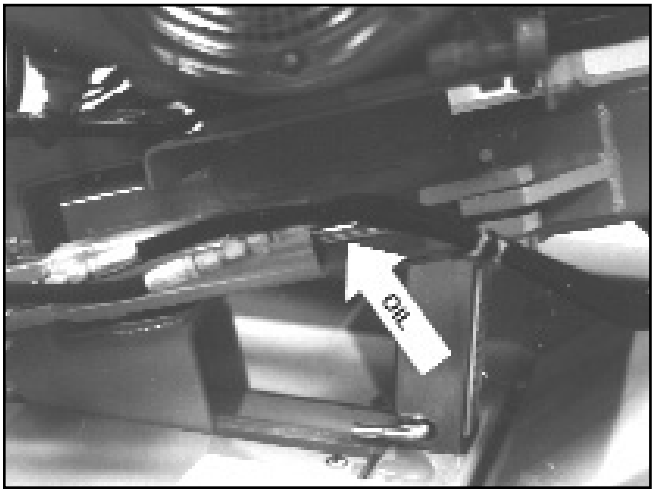

Apply SAE 30 engine oil and spread evenly over the exposed portion of the rod on both the left (shown above) and right cylinders.

Self-Propel Wheel Drive Chain - Check

Clean

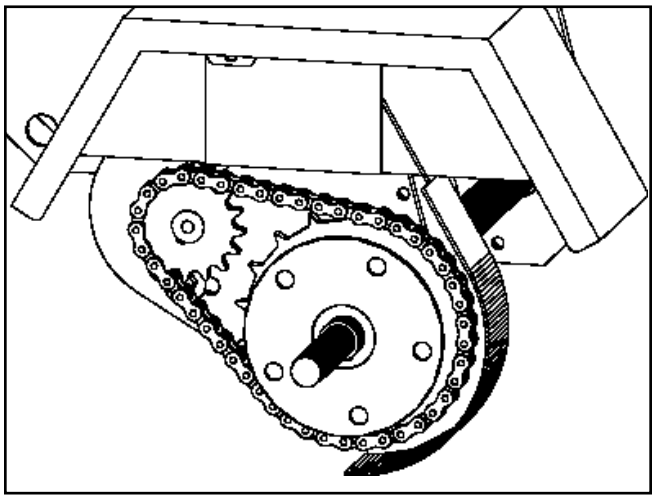

Inspect, and remove any wood chips and any other debris.

Check Tension

Check the drive chain for 1/8" to 1/4" deflection at the center of the chain span. If the chain tension does not fall within the specified range, loosen the mounting bolts and nuts which secure the hydraulic motor, and pivot the motor on the upper bolt until proper tension is attained. Retighten the nuts and bolts.

Apply Oil

Apply with SAE 30 engine oil evenly over the entire length of the chain.

Copyright © 2004 Rayco - All Rights Reserved
Printed in U.S.A.

Swing Pivot - Inspect

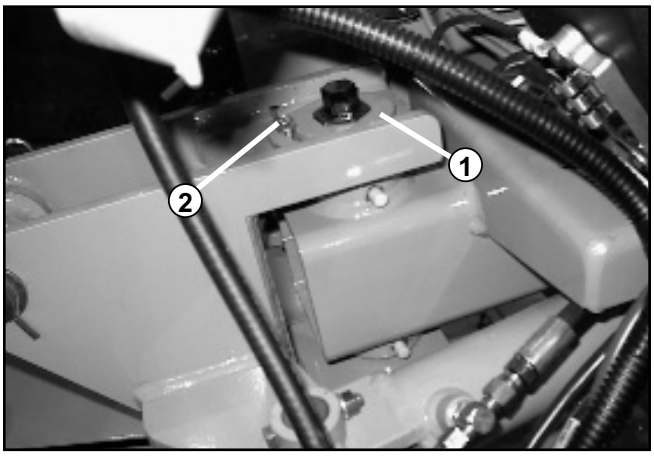

Inspect to make sure that the lock plate (1) and tensioning bolt (2) are tight. The swing pivots in the RG1625A SUPER JR are built to last a long period of time with very little maintenance

No adjusting or fine tuning is required to maintain the pivots. Routine lubrication of these pivots and the bearings should assure you long life of these parts. In the event that a bearing needs replaced or any other maintenance needs to be performed on the swing pivot, please contact your Rayco representative or the factory.

Every 200 Service Hours

Engine Oil Filter - Change

Follow the directions found in the *Kohler Engine Operation Manual.* Change more frequently if directed, depending on how you use your machine.

Spark Plugs - Replace

Follow the directions found in the *Kohler Engine Operation Manual.*

Clutch - Burnish

Follow the directions found on page 5 of this manual.

Copyright © 2004 Rayco - All Rights Reserved
Printed in U.S.A.

Every 250 Service Hours or 1 Year

Hydraulic Oil Filter - Change

NOTICE

Keep the insides of all hydraulic components clean as they are installed.

The machine must not be operated without the filter in place, or severe damage to the major hydraulic components will likely occur.

A 10 micron filter is used on this machine. It is located in the oil return line to filter the oil before entering the reservoir. The oil filter head has a built in relief, which can open and bypass the filter if the oil is extremely cold, or if the oil filter becomes clogged. The filter also has a filter service indicator that shows when the filter needs replaced.

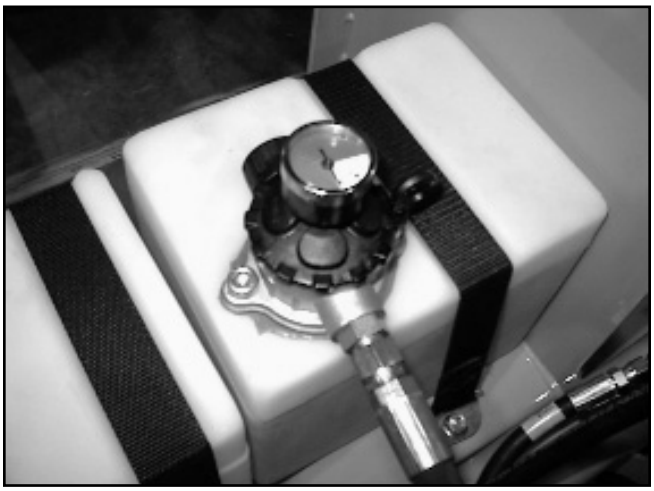

Always keep the hydraulic oil clean.

Self-Propel Wheels Bearings - Service

The wheel bearings on the machine should be checked for lubrication and/or adjustment. The following procedure should be used for checking wheel bearings:

1. Jack one side of the machine up until one wheel is off the ground.
2. Remove the wheel bearing dust cap.
3. Remove the cotter pin, castellated nut and washer.
4. Remove the outer bearing and inspect the lubricant.

If a generous amount of soft grease is on the bearing and in the housing, the grease need not be changed.

If the bearings seem dry and the grease is caked, the bearings should be washed to remove the grease.

WARNING

Gasoline should not be used as a cleaning agent because of fire and or explosion danger.

To repack the bearings, the wheel must be pulled and the inner bearing and seal must be removed. If the seal is damaged, it must be replaced.

The housing and bearings should be washed with kerosene or clean solvent and wiped clean. When repacking the bearings, the grease must be worked into the roller bearings to allow the entire bearing to be filled with grease.

When readjusting the wheel bearings, tighten the castellated nut until drag is felt when the wheel is turned. Loosen the nut until the wheel spins freely.

Copyright © 2004 Rayco - All Rights Reserved
Printed in U.S.A.

Engine Air Cleaner Filters - Replace



To change the air filter elements on the Kohler engine, simply undo the clips on the bottom section of the air cleaner.

Follow the directions for checking and replacing the inner and outer elements found in the *Kohler Engine Operation Manual.*

Every 500 Service Hours or 1 Year

Hydraulic Oil - Change

Drain the Oil

1. Steam clean the pump, motor, cylinders, hydraulic lines, fittings, and tank.
2. Place the machine on level ground.

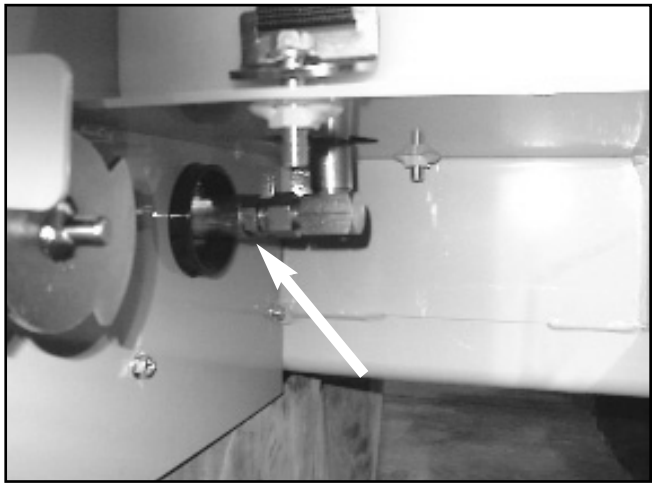

3. Place a container below the hose and fitting located underneath the hydraulic oil tank.
4. Remove the hose from the fitting and allow the oil to drain into the container.
5. Clean and install the hose.
6. Loosen the hose fittings on the cylinders, and drain as much fluid as feasible.
7. Replace and tighten fittings.

Dispose of drained oil according to local environment protection regulations.

Copyright © 2004 Rayco - All Rights Reserved
Printed in U.S.A.

Start Up Procedure

NOTICE

Prior to filling with fluid, make certain all system components (reservoir, hoses, valves, fittings, pump, etc.) are clean.

Care must be taken to not run the pump or hydraulic motor without a sufficient amount of fluid in them.

1. Make sure all fittings are tight.
2. Fill the reservoir with the recommended hydraulic oil (see "System Fluid Specifications"), which should be passed through a 10 micron (nominal) non-bypass filter prior to entering the reservoir. Never reuse fluid.

⚠ WARNING

Before operating, please consult the "Safety" section for vital information related to operating this powerful machine!

3. Crank the engine, using the starter, for a short period of time. This allows the system to begin filling with fluid. Start the engine and run at the lowest possible speed. Shut down the engine within 40 seconds if the pump or motor begin making an unusual noise, indicating a lack of oil, and be sure the reservoir is full and all the hoses are properly connected.
4. Set the engine throttle at approximately 50% of maximum throttle for a few minutes. This will purge trapped air from the pump/control valve circuit.
5. Cycle the self-propel drive lever, two or three times, to purge all remaining trapped air from the self-propel motor circuit.

The hydraulic motor is now ready for operation.

6. Now the hydraulic cylinders circuits may be prepared. Run the engine at normal operating speed. Using the cutting boom motion lever, slowly, then at normal operating speed, cycle the cylinders through all their motions until all the air is bled off. The motions will be smooth and powerful when all of the air is bled off.
7. Check the reservoir level, and add more clean fluid if necessary.

The hydraulic system is now completely ready for operation.

8. Clean up any spilled hydraulic fluid.

UTE Bendix Starter - Service

Follow the directions found in the *Kohler Engine Operation Manual.*

Solenoid Shift Starter - Clean

Follow the directions found in the *Kohler Engine Operation Manual.*

Copyright © 2004 Rayco - All Rights Reserved
Printed in U.S.A.

Every 3 Months or 3,000 Miles

Trailer Wheel Nuts & Bolts - Tighten

Detailed directions may be found in the *Trailer Running Gear - Operation Maintenance Service Manual* which was provided with the machine.

Tire Condition - Inspect

Check for cracks or other abnormalities on the tires of the stump cutter and the trailer. Replace if necessary.

Every 6 Months or 6,000 Miles

Trailer Wheels - Inspect for Cracks, Dents, Distortion

Detailed directions may be found in the *Trailer Running Gear - Operation Maintenance Service Manual* which was provided with the machine.

Every 1 Year or 12,000 Miles

Front Steering Wheels & Trailer Wheel Bearings - Clean & Repack

Remove Hub

1. Elevate the side of the machine where the wheel is being inspected. A common hydraulic floor jack may be used. Place the jack on the front bumper to lift machine.

   The cutter wheel may also be used to lift the machine. Position the cutter wheel all the way to the left or right and drive cutter wheel into the ground until the wheel comes off of the ground.

Referring to the STEERING AXLE ASSEMBLY in the “Parts” manual:

2. Remove the wheel (10).
3. Remove the dust cap (13) by carefully prying progressively around the flange of the cap.
4. Remove the cotter pin (15) from the axle nut (14).
5. Unscrew the axle nut (counter-clockwise) and remove the spindle washer.
6. Remove the wheel from the spindle, being careful not to allow the smaller bearing race & rollers (cone) to fall out. The larger bearing race & rollers will be retained by the seal (12).

Copyright © 2004 Rayco - All Rights Reserved
Printed in U.S.A.

MAINTENANCE INTERVALS

Bearing Inspection

Wash all grease and oil from the bearing race & rollers (cone) using a suitable solvent.

WARNING

Gasoline should not be used as a cleaning agent because of fire and explosion danger.

Dry the bearing with a clean, lint-free cloth, and inspect each roller completely. If any pitting, spalling, or corrosion is present, then the bearing should be replaced. The bearing cup inside the hub should likewise be inspected.

NOTICE

Bearings must always be replaced in SETS: a cone and a cup! If the bearing needs replaced, replace the cup also. If the cup needs replaced, replace the bearing also.

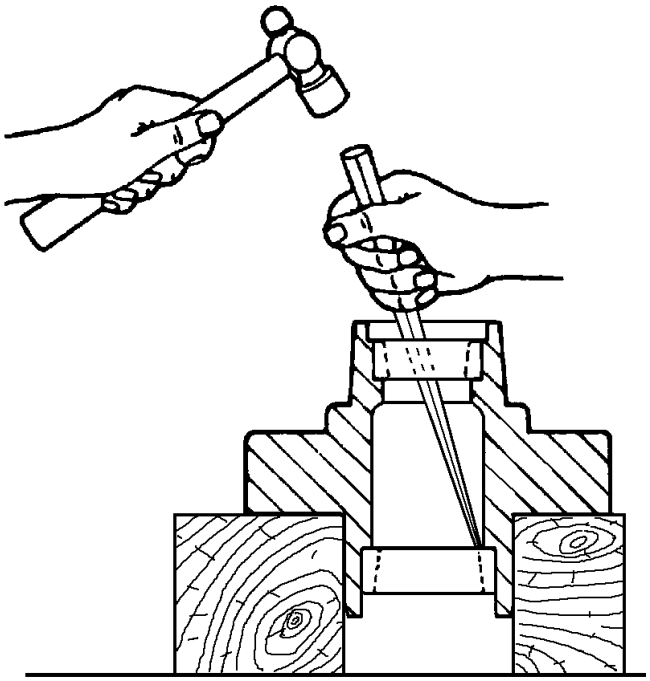

To replace a bearing cup

1. Place the hub on a flat work surface with the cup to be replaced on the bottom side.
2. Using a brass drift punch, carefully tap around the small diameter end of the cup to drive out.
3. After cleaning the hub bore area, replace the cup by tapping in with the brass drift punch. BE SURE THE CUP IS SEATED ALL THE WAY UP AGAINST THE RETAINING SHOULDER IN THE HUB.

Replace only with bearings as specified in the Parts Manual.

Bearing Lubrication

Along with bearing adjustment, proper lubrication is essential to the proper functioning and reliability of the wheel axles. Bearings should be lubricated annually or every 12,000 miles.

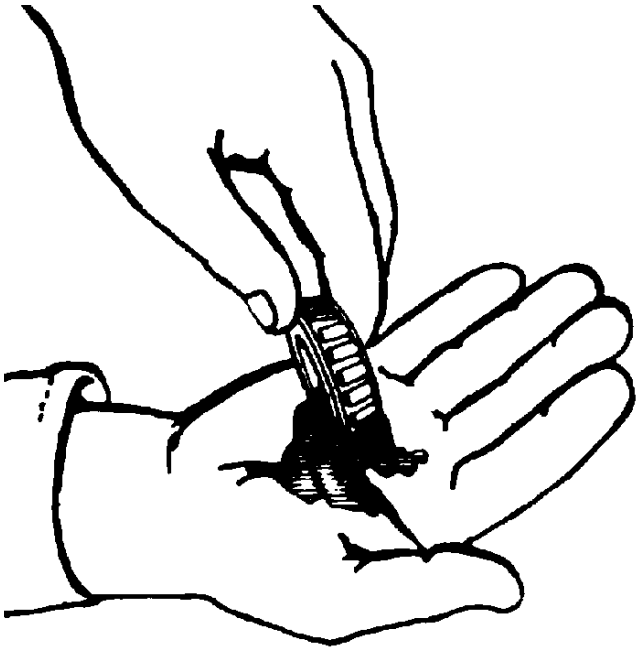

To repack a bearing cone

1. Place a quantity of grease into the palm of your hand.
2. Press a section of the widest end of the bearing into the outer edge of the grease pile closest to the thumb, forcing grease into the interior of the bearing.
3. Repeat this while rotating the bearing from roller to roller.
4. Continue this process until you have the entire bearing completely filled with grease.
5. Before re-installing, apply a light coat of grease on the bearing cup.

Copyright © 2004 Rayco - All Rights Reserved
Printed in U.S.A.

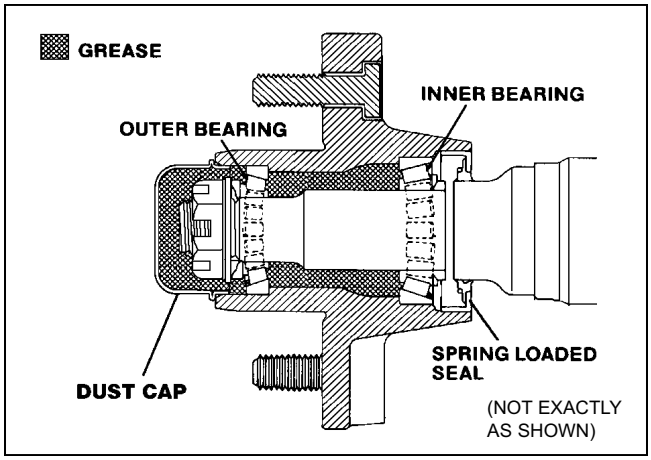

6. When reassembling, apply a generous amount of grease to wheel hub cavity and dust cap.

Seal Inspection and Replacement

Whenever the hub is removed, inspect the seal to assure that it is not nicked or torn and is still capable of properly sealing the bearing cavity. If there is any question of condition, replace the seal. Use only the seal specified in the Parts Manual.

To replace the seal, use the following procedure.

1. Pry the seal out of the hub with a screwdriver. Never drive the seal out with the inner bearing, as you may thus damage the bearing.
2. Apply a PERMATEX™ sealant to the outside of the seal.
3. Tap the new seal into place using a clean wood block.

Bearing Adjustment and Hub Replacement

If the hub has been removed or bearing adjustment is required, the following adjustment procedure must be followed :

1. After placing the hub, bearings, washers, and castle nut back on the axle spindle in reverse order as detailed in the previous section on hub removal, rotate the hub assembly slowly while tightening the castle nut to approximately 50 ft.-lb. (12" wrench or pliers with full hand force).
2. Then loosen the castle nut to remove the torque. DO NOT ROTATE THE HUB.
3. Finger tighten the castle nut until just snug.
4. Back the castle nut out slightly until the first castellation lines up with the cotter key hole, and insert the cotter pin. The nut should remain snug just enough to not rotate freely.
5. Bend over the cotter pin legs to secure the nut.

Copyright © 2004 Rayco - All Rights Reserved
Printed in U.S.A.

Clutch Replacement

A bearing mounted clutch/brake refers to a unit that has the bearing mounted in the field/rotor assembly.

Step 1:

Slide the clutch onto the shaft (for a two-piece clutch, slide both pieces on one at a time), making sure that the key is in the proper location. Do not force the clutch onto the shaft because if the key is off slightly, damage could occur to the key or to the bore of the clutch.

The clutch should be slid onto the shaft until the bearing inner race on the clutch contacts a step, washer or other drive pulley. In all cases, the mounting surfaces of these components need to be parallel to each other within .003". If these surfaces are not parallel, the clutch could become cocked on the shaft. (This would show up as a wobbling pulley.)

The contact of these components, to the bearing inner race, can extend beyond the inner race because the seal is recessed. (If you are using a washer, make sure it is not cupped, otherwise this cupping could dig into the bearing seal.)

Make sure to check the chamfer on the ground drive pulley, washer or clutch so they do not interfere with the radius on the step in the engine crankshaft. On some clutches, the bearing is kept on the inner sleeve via a snap ring (pulley side). With this design, the rotor would then contact the appropriate step in the shaft.

Step 2:

A center bolt and washer is then placed into the end of the tapped shaft and then tightened down. The washer should be .250" in thickness. Bolt tightening torque will vary depending upon the bolt used in the application. This can be anywhere from 20-50 ft. lbs. of tightening torque depending on the bolt. If vibration is heavy, a thread lock type adhesive may be required to prevent the bolt from coming loose. The washer should contact the inner race of the bearing. It can extend beyond the inner race as long as it does not contact the outer race.

Step 3:

If the torque restraining piece has not been installed, please do so at this time. Whichever method you choose to restrict rotation of the backing plate, please make sure that there is 1/16" of both axial and radial movement allowed in the backing plate of the clutch/brake. Without this movement, the backing plate can cock the field bearing which would cause a premature field bearing failure.

Whether you choose to use the slot that is already manufactured in the clutch or other method, please make sure that your hardware can hold the braking torque of the brake, which can be anywhere from 2.2 to 20 pounds, depending upon clutch size.

Air Gap Adjustment

If you have a bearing mounted one-piece design, your clutch should automatically be adjusted at the factory and no adjustment is required. This section is for your reference only. Please proceed to the burnishing section. If you have a two-piece design or a flange mount design, please adjust using the following procedure:

1. Mount all components to the clutch according to the installation procedure. Please make sure that the brake plate and coil springs are in the proper position.

   Start to tighten down the gap adjustment nuts. The same number of turns should be applied to each nut successively so the adjustment is as even as possible.

2. There are three inspection slots on the brake cover. With a feeler gauge of between .013-.015 for clutches used on 25 horsepower and under, and .015-.022 for clutches used on 25-31 horsepower, tighten each nut down until slight contact is felt on the feeler gauge.

   Once all three are finished, go back and check the air gap (occasionally some minor adjustment will be required).

3. Once the air gap is within the specified range, engage the clutch at full coil voltage and rotate it. If there is no contact on the brake shroud, the clutch is okay; however, if there is any contact with the brake shroud, the gap adjustment nuts should be backed off slightly to eliminate the contact.

Copyright © 2004 Rayco - All Rights Reserved
Printed in U.S.A.

HOW TO USE A V-BELT TENSION GAUGE

1. **CAUTION:** Before doing maintenance or tensioning on belt drives, turn equipment off and lock out the power source. Use guards on machinery when running.

   Place a matched set of belts over the sheave grooves. Take up the slack until the belts appear fairly taut.

2. With the drive stopped, measure the belt span length of your drive (see sketch). Set the rubber O-ring on the body of the tension gauge at the dimension equal to 1/64 inch for every inch of span length. For example, the deflection for a 32 inch span is 1/64 inch x 32, 1/2 inch.

3. Set the O-ring on the plunger at 0 against the body of the tension gauge.

4. With the tension gauge perpendicular to the span, apply a force to a belt in the center of the span. Deflect the belt until bottom of the large O-ring is even with the top of the next belt, or the bottom of a straight edge laid across the top of other belt(s) on the drive. Release pressure and read pounds of force used at O-ring on plunger.

Note: When new belts are installed on a drive, the tension will drop rapidly during the first few hours. Thus, for new belts, tighten to the initial installation deflection force shown in the tables below. Check tension frequently during the first 24 hours of operation. Subsequent retensioning should fall between the minimum and maximum forces shown in the tables.

5. Compare the force required in step 4 with the ranges in the tables below.

   Tighten or loosen belts to bring them into the recommened range.

Note: The proper tension for V-belt drive is the lowest tension at which the belts won't slip under peak load conditions.

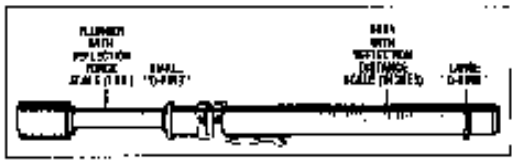

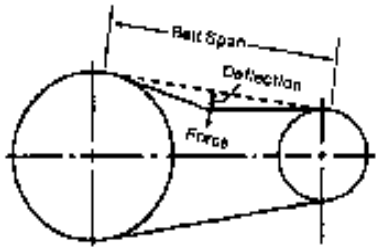

V-Belt Cross Section	Small Sheave Diameter Range (Inches)	Recommended Deflection Force (Lbs.) Initial Installation	Retensioning Maximum	Retensioning Minimum
A	3.0- 3.4	3.3	2.9	2.2
	3.6- 4.2	3.5	3.1	2.4
	4.6- 8.0	3.7	3.3	2.5
B	4.6- 5.4	6.0	5.1	4.0
	5.6- 7.4	6.3	5.5	4.2
	8.6- 8.4	6.6	5.7	4.4
C	7.0- 8.5	13.2	11.5	8.8
	9.0-12.0	13.9	12.1	9.3
	13.0-16.0	14.8	12.8	9.7
D	12.0-15.5	26.5	22.9	17.8
	16.0-18.0	27.8	24.3	18.7
	22.0-27.0	29.1	25.6	19.6
E	17.7-23.6	39.7	34.4	26.5
	23.7-31.5	41.7	36.2	27.8
	31.6-38.3	43.7	37.9	29.1
AX	2.1- 3.4	4.4	3.7	2.9
	3.6- 4.2	4.6	4.0	3.1
	4.6- 6.0	4.8	4.2	3.3
BX	3.7- 5.4	7.7	6.6	5.1
	5.6- 7.4	8.2	7.1	5.5
	8.6- 9.4	8.6	7.5	6.7
CX	5.8- 8.5	17.2	15.0	11.5
	9.0-12.0	18.1	15.7	12.1
	13.0-16.0	19.0	16.5	12.8

V-Belt Cross Section	Small Sheave Diameter Range (Inches)	Recommended Deflection Force (Lbs.) Initial Installation	Retensioning Maximum	Retensioning Minimum
3V	2.65- 3.35	5.5	4.8	3.9
	3.65- 4.12	6.4	5.7	4.4
	4.50- 5.60	7.5	6.6	5.1
	6.00-10.60	8.8	7.5	5.7
5V	7.10- 8.50	19.2	16.7	13.0
	9.00-11.80	23.3	20.3	15.6
	12.50-16.00	27.3	23.8	18.5
8V	12.50-16.00	50.9	44.3	34.4
	17.00-20.00	57.1	49.8	38.5
	21.20-24.80	61.3	53.3	41.4
3VX	2.20- 3.35	5.5	4.8	3.9
	3.65- 4.12	6.4	5.7	4.4
	4.50- 5.60	7.5	6.6	5.0
	6.00- 0.60	8.8	7.5	5.7
5VX	4.40- 8.50	19.2	16.7	13.0
	9.00-11.80	23.3	20.9	15.6
	12.50-16.00	27.3	23.8	18.5

Copyright © 2004 Rayco - All Rights Reserved
Printed in U.S.A.

CHARTS & SPECS

Electrical System and Components Troubleshooting Guide (RG 1625A)

15/25 amp Battery Charging System

When problems occur in keeping the battery charged or the battery charges at too high a rate, the problem can usually be found somewhere in the charging system or with the battery.

NOTE: **Always zero ohmmeter on each scale before testing** to ensure accurate readings. Voltage tests should be made with the engine running at 3600 RPM - no load. The battery must be fully charged.

Problem	Test	Conclusion
No Charge to Battery	1. Trace B+ lead from rectifier-regulator to key switch, or other accessible connection. Disconnect it from switch or connection. Connect and ammeter from loose end of B+ lead to positive terminal of battery. Connect DC voltmeter from loose end of B+ lead to negative terminal of battery. With engine running at 3600 RPM, read voltage on voltmeter. If voltage is 13.8 volts or more, place a minimum load of 5 amps* on battery to reduce voltage. Observe ammeter. *NOTE: Turn on lights, if 60 watts or more. Or place a 2.5 ohm, 100 watt resistor across battery terminals.	1. If voltage is 13.8-14.7 and charge rate increases when load is applied, the charging system is OK and battery was fully charged. If voltage is less than 13.8 or charge rate does not increase when load is applied, test stator (tests 2 and 3).
	2. Remove connector from rectifier-regulator. With engine running at 3600 RPM, measure AC voltage across stator leads using an AC voltmeter.	2. If voltage is 28 volts or more, stator is OK. Rectifier-regulator is faulty. Replace the rectifier-regulator. If voltage is less than 28 volts, stator is probably faulty and should be replaced. Test stator further using an ohmmeter (test 3).
	3a. With engine stopped, measure the resistance across stator leads using an ohmmeter.	3a. If resistance is 0.064/.02 ohms, the stator is OK. If the resistance is infinity ohms, stator is open. Replace stator.
	3b. With the engine stopped, measure the resistance from each stator lead to ground using an ohmmeter.	3b. If the resistance is infinity ohms (no continuity), the stator is OK (not shorted to ground). If resistance (or continuity) is measured, the stator leads are shorted to ground. Replace stator.
Battery Continuously Charges at High Rate	1. Perform same test as step 1 above.	1. If the voltage is 14.7 volts or less, the charging system is OK. The battery is unable to hold a charge. Service battery or replace as necessary. If voltage is more than 14.7 volts, the rectifier-regulator if faulty. Replace rectifier-regulator.

Copyright © 2004 Rayco - All Rights Reserved
Printed in U.S.A.

CHARTS & SPECS

15 amp Regulated Charging System

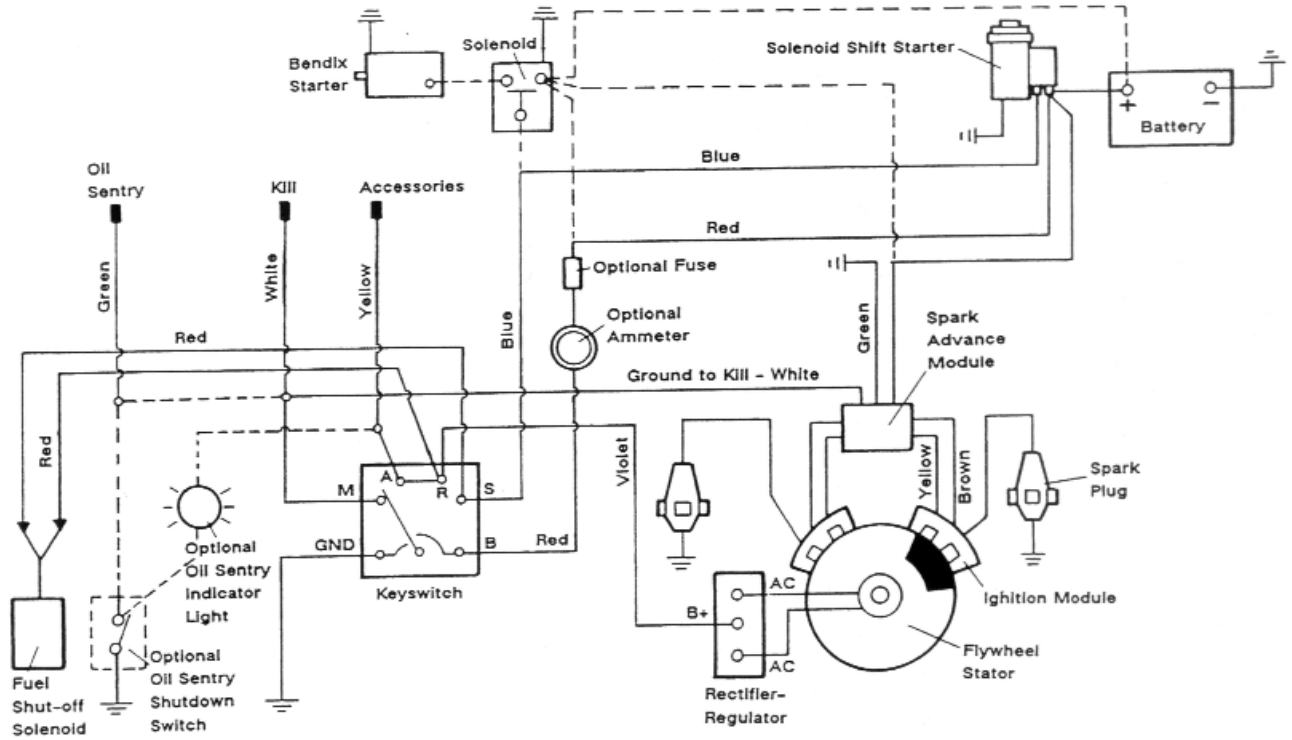

Figure 1 - 15 amp Regulated Battery Charging System

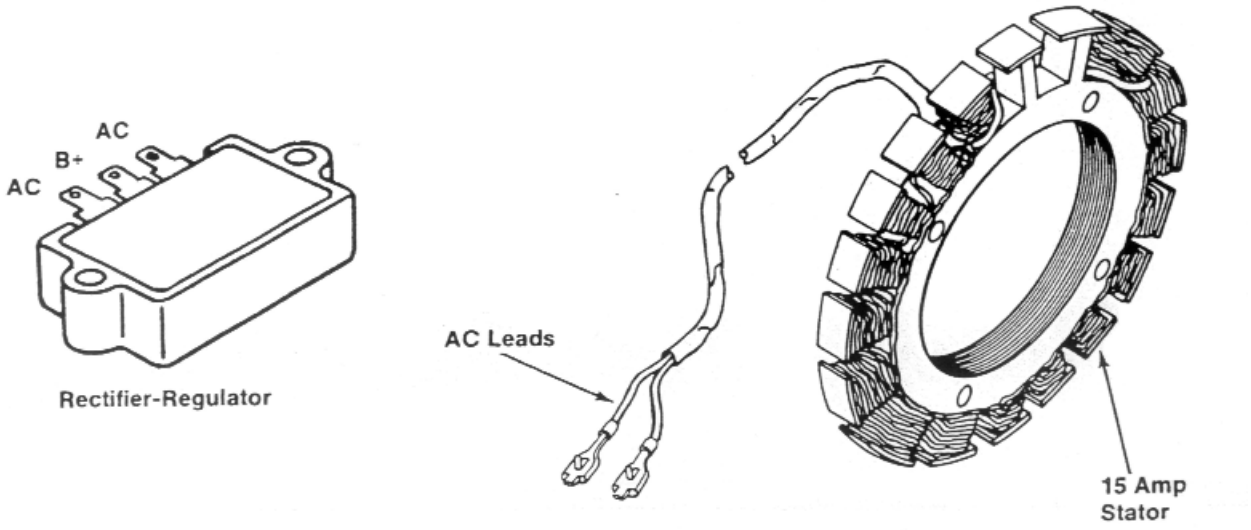

Figure 2 - 15 amp Stator and Rectifier-Regulator

Copyright © 2004 Rayco - All Rights Reserved
Printed in U.S.A.

CHARTS & SPECS

BATTERIES

The battery is of the 12 volt, lead acid, wet cell type. This type is available as a maintenance free or a dry charged battery.

The maintenance free battery is filled with electrolyte at the time of manufacture. The level of electrolyte cannot be checked (Fig. 6).

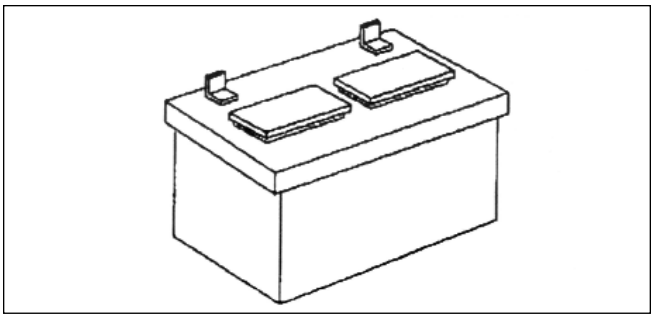

Fig. 6 - Typical Wet Charge Battery

The dry charged battery is manufactured with fully charged plates. Electrolyte must be added at the time that the battery is placed in service. Before activating a dry charged battery, read and follow the manufacturer's recommended procedure.

Recommended battery sizes range from a minimum 30 ampere hour for warm temperature service to 50 ampere hour in coldest service.

WARNING: BATTERIES PRODUCE HYDROGEN, AND EXPLOSIVE GAS. DO NOT STORE, CHARGE OR USE A BATTERY NEAR AN OPEN FLAME OR DEVICES WHICH UTILIZE A PILOT LIGHT OR CAN CREATE A SPARK.

Installation

1. Before installing battery, connect all equipment to be operated (Fig. 7).

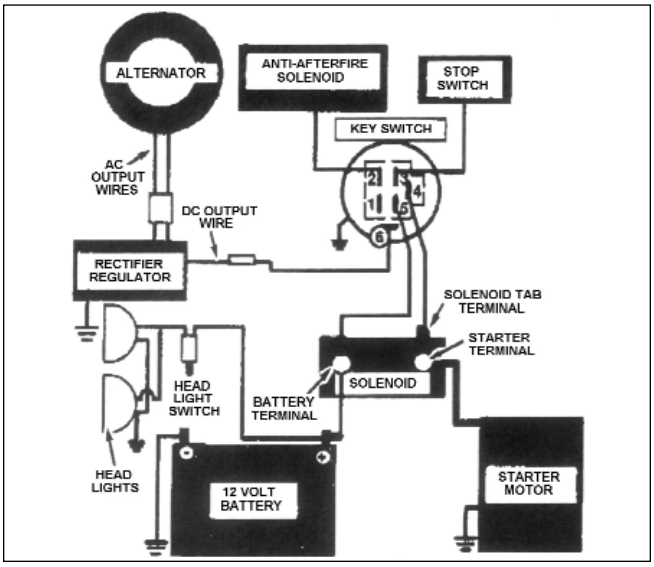

Fig. 7 - Typical 12V Wiring Diagram

2. Place battery in holder with a flat base. Tighten hold downs evenly until snug. DO NOT overtighten.
3. Connect positive terminal to positive post FIRST to prevent sparks from accidental grounding. Tighten connectors securely.
4. Connect negative terminal to negative battery terminal. Tighten connectors securely.

Checking Battery

1. Physical check - clean if necessary.
   a. Corrosion
   b. Dirt
   c. Terminal and clamps (secure - good condition)
2. Bring battery to full charge.

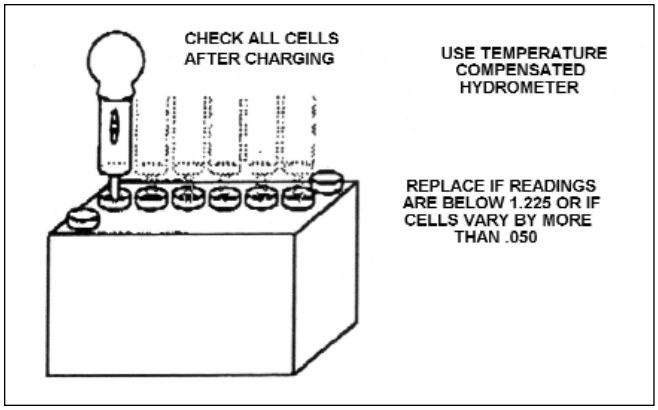

Fig. 8 - Checking 12V Battery Cells (Lead Acid, Wet Cell, With Fill Caps)

DO NOT EXCEED CHARGE RATE OF 1/10 AMPERE FOR EVERY AMPERE OF BATTERY RATING.

Consult battery manufacturer for charging recommendations. Overcharging may cause battery failure.

a. Use a taper charger (automatically reduces charge rate).

b. Fill battery cells with distilled water or tap water (unless maintenance free type) after charging (for batteries that have been in service).

   Note: If battery gets "hot" to the touch or is spitting acid (gassing) excessively, unplug charger periodically.

3. With battery fully charged, check specific gravity readings (unless maintenance free type) of each cell with a Battery Hydrometer and record readings (Fig. 8).

All readings should be above 1.250 (compensating for temperature). If specific gravity readings varied .050 or if ALL cells read less than 1.225, replace battery.

Copyright © 2004 Rayco - All Rights Reserved
Printed in U.S.A.

CHARTS & SPECS

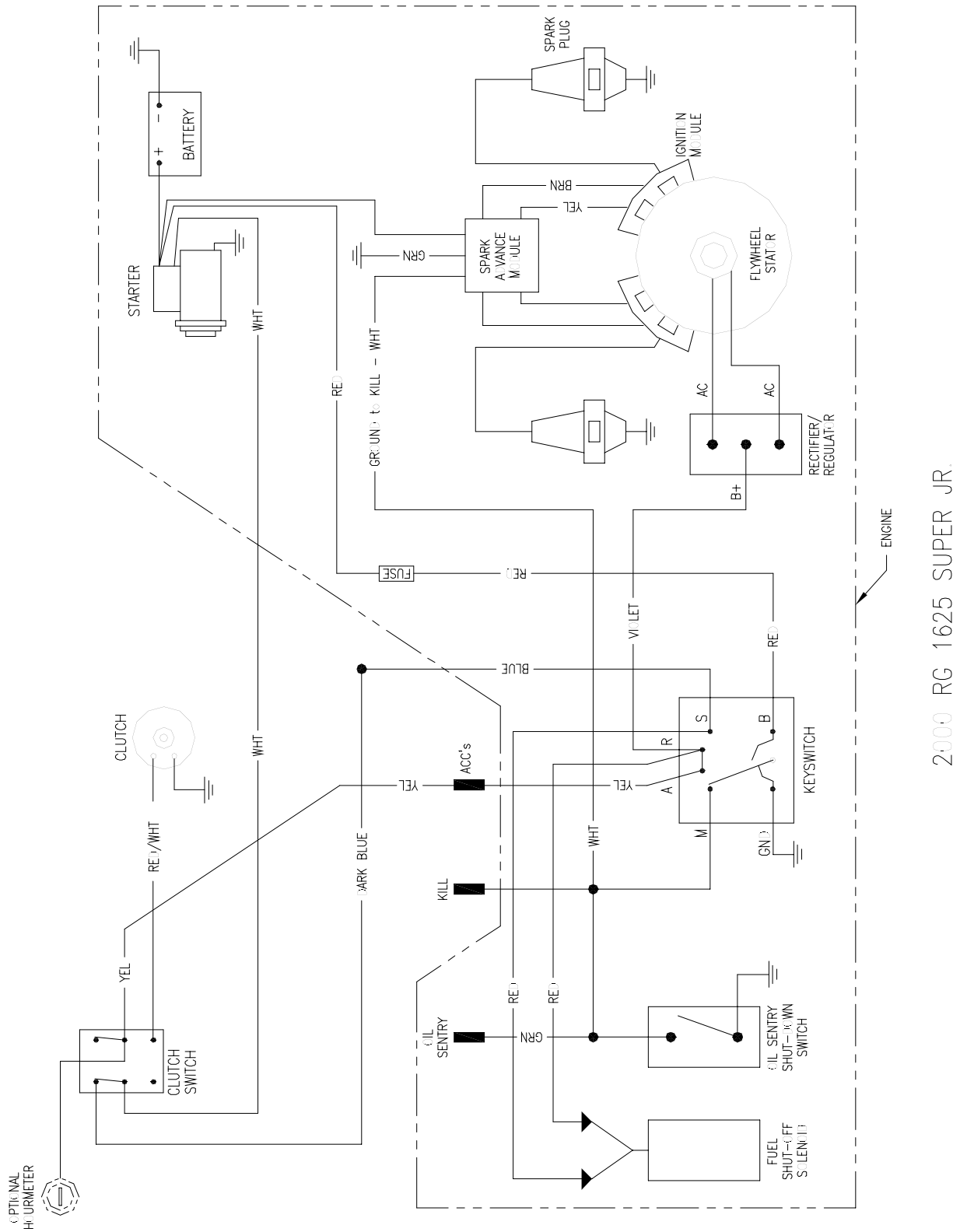

Copyright © 2004 Rayco - All Rights Reserved
Printed in U.S.A.

1625JR-2003 Super Jr. Command Cut Installation

Kit Contents:

(1)	761090	Command Cut valve
(1)	12731	Command Cut Harness
(1)	610021	Toggle Switch
(1)	610022	Switch guard
(1)	610023	Rubber boot
(1)	738011	Swing lock valve
(2)	761209	Hydraulic hose - ¼ x 24”
(2)	12723	Hydraulic tube - ¼”
(2)	738742	Elbow - 90 degree ¼ JIC swivel
(4)	738130	Nipple - ¼ NPT x ¼ JIC
(2)	750400	Bolt-whiz 5/16-18 x 1/2”
(4)	726202	Washer - lock 5/16
(2)	724201	Nut - hex 5/16-18
(4)	726201	Washer – flat 5/16
(2)	761206	Bolt-hex 5/16-18 X 5”
(2)	722201	Bolt-hex 5/16-18 X 2”
(1)	12720	Mount, Command Cut

Installation Instructions:

1) Fasten Command Cut valve mount (12720) to drawer cover using (2) 5/16-18 x 1/2” whiz bolts.

2) Fasten Command Cut valve assembly to valve mount (12720) using 5/16-18 x 5” hex bolts, lock washers, flat washers and nuts provided.

3) Fasten lock valve to drawer cover using (2) 5/16-18 x 2” hex bolts, lock washers and nuts provided.

4) Remove each swing hose and route each hose into the lock valve shown below.

5) Attach hyd. Tubes (12723) from the lock valve to Command Cut valve as shown below.

6) Attach hyd. Hoses ¼” x 24” from valve bank to Command Cut valve as shown below.

Copyright © 2004 Rayco - All Rights Reserved
Printed in U.S.A.

CHARTS & SPECS

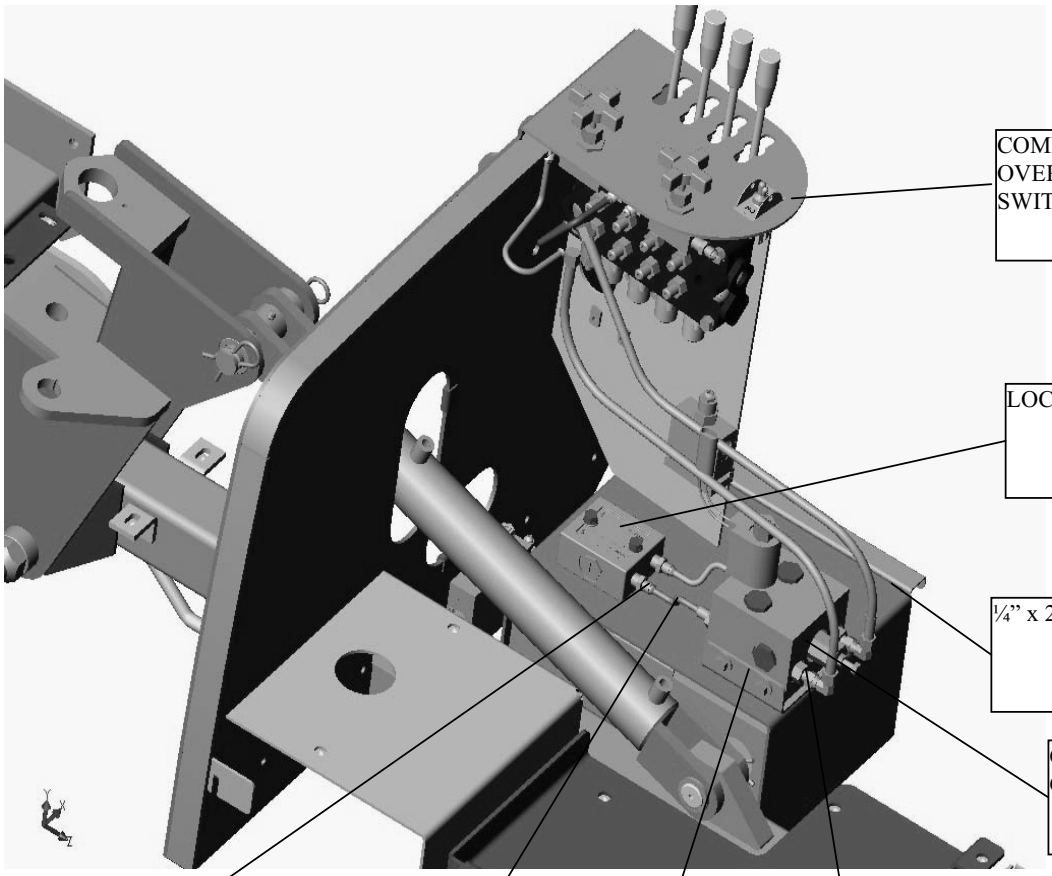

7) Plug the (2) pin connector from the command cut harness into the command cut valve connector. Attach the black wire near the (2) pin connector end to the mounting bolt for the command cut valve. Attach the command cut harness yellow wire onto the hourmeter's (+) terminal and reattach the hourmeter yellow wire to the back of the command cut harness piggyback terminal.

8) Attach the 2" black wire lead and the 2" white wire lead onto the command cut over-ride toggle switch terminals.

9) Start the machine and swing the boom side to side. The boom should swing slower than normal. Switch the command cut over-ride toggle switch then swing your boom. The boom should swing at the normal speed. Bottom out the swing cylinders in each direction and check all hydraulic connections for leaks.

10) The valve is factory-set for optimum performance, however, it can be adjusted to suit individual cutting preferences. To increase the swing speed, turn out the 1/4" bolt that projects from the flow control valve. To slow the swing, turn in the adjusting bolt.

Copyright © 2004 Rayco - All Rights Reserved
Printed in U.S.A.

Trouble-Shooting

Hydraulic System

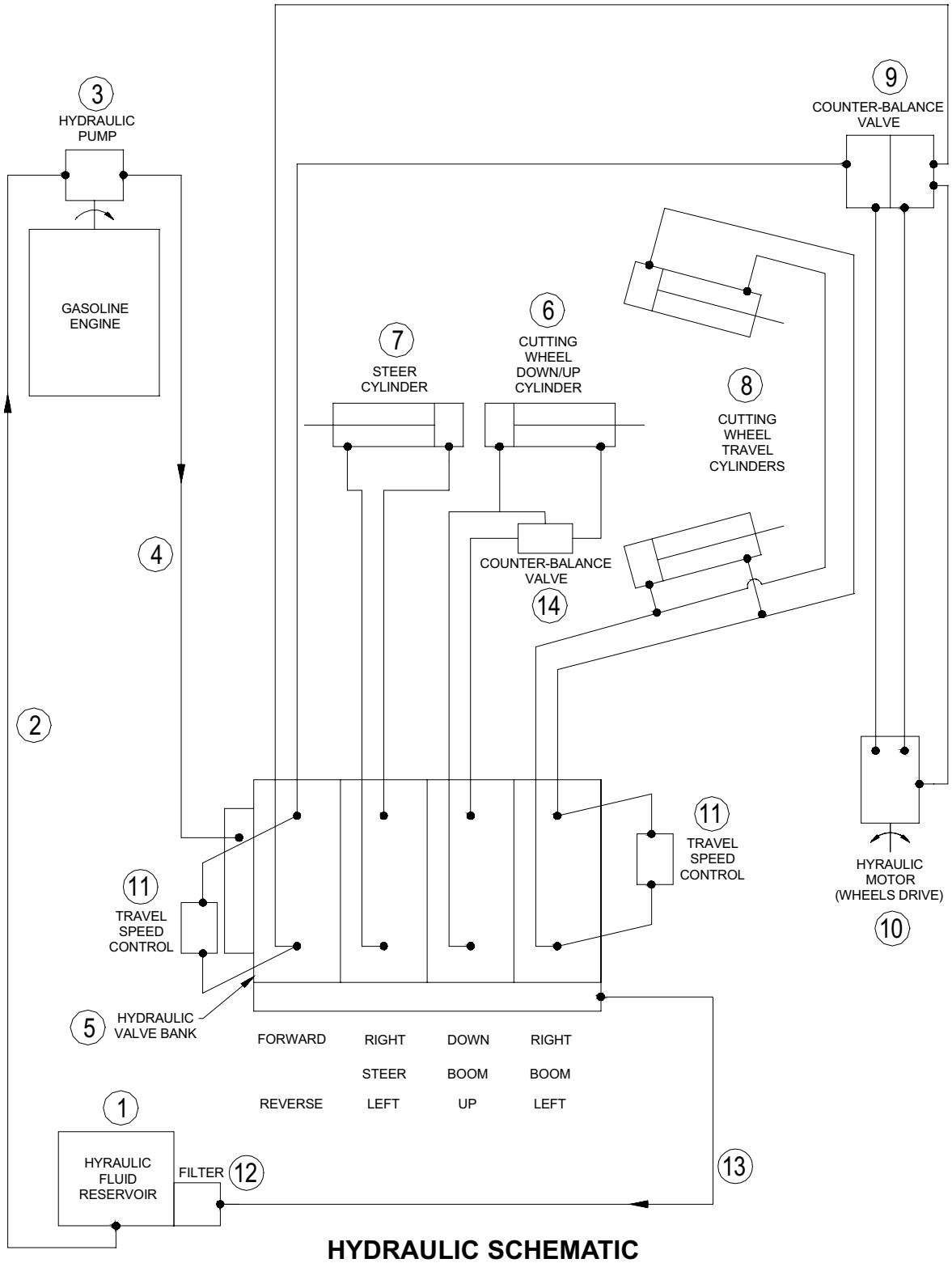

HYDRAULIC SCHEMATIC

Copyright © 2004 Rayco - All Rights Reserved
Printed in U.S.A.

How Hydraulic System Works

The oil tank or "reservoir" (1) holds in supply and helps cool the hydraulic oil. The oil flows from the reservoir through the low pressure hose (2), and then to the oil pump (3).

The pump supplies power for all hydraulic operations. The pump, a gear type, energizes the oil through a high pressure hose (4), at 1.8 gpm at 2800 psi when engine speed is at 3600 rpm, to the four bank control valve (5). The control valve contains an integral relief valve which prevents system pressure from exceeding 2800 psi.

The control valves, via the operator's movements of the levers, control the movement of the down/up cylinder (6), the steer cylinder (7), the cross travel cylinders (8), and the hydraulic motor (10).

Exhaust oil from the control valve is routed through the hose (13), through the oil filter (12), and back to the reservoir.

Some additional elements influence the boom motion control circuit.

A motion speed control (11) is included in a line which connects the two directional control valve ports leading to the wheel drive motor. It is a simple hand-operated needle valve. The farther it is opened, the more leakage occurs between the two sides of the motor, which slows down the drive motion. This allows for finer movement into the stump during cutting.

A dual counterbalance cutting valve (9) is provided in the hydraulic motor circuit, to prevent the force of gravity from overrunning the self-propel drive system when traveling down a hillside. An internal valve in the return line of the counterbalance valve will not open until a pilot pressure is applied from the supply line of the counterbalance valve.

A counterbalance valve (14) is provided in the boom up/down cylinder circuit, to prevent gravity from allowing the boom to drift downward.

Symptom - Loss of Hydraulic Power

A. Problem - Pump Belt Slippage

Tighten the belt as directed in "Every 50 Service Hours" Interval of the "Maintenance Intervals" section.

B. Problem - Hydraulic tank empty

Re-fill as directed in "Every 10 Service Hours" Interval of the "Maintenance Intervals" section.

Symptom - Cutting Wheel Travel Weak

Cutting Wheel Lacks Sufficient Power in either the UP or DOWN or IN or OUT or LEFT or RIGHT direction of travel.

A. Problem - Cylinder rod seal leaking

If when operated, the cylinder loses fluid around the rod, the rod seal is leaking.

Solution for Faulty Cylinder Piston Seal

Replace the cylinder rod seal, using a kit available from your Rayco distributor.

B. Problem - Cylinder piston seals leaking

To determine if the cylinder piston seals are leaking, perform a hydraulic pressure check of the cylinder's circuit (see the following page).

⚠ WARNING

Please take note of danger of fluid penetration given in the "Safety/General Hazard Information" section of the Operator Manual. Improperly tightened fittings can result in dangerous leaks.

Whenever changing fittings, the engine must be turned OFF and the internal pressures relieved, to avoid dangerous high pressure leaks at loosened fittings.

Copyright © 2004 Rayco - All Rights Reserved
Printed in U.S.A.

TROUBLESHOOTING

A liquid-filled pressure gauge capable of withstanding up to 3000 PSI should be installed by inserting it into the lower fitting on the hydraulic pump.

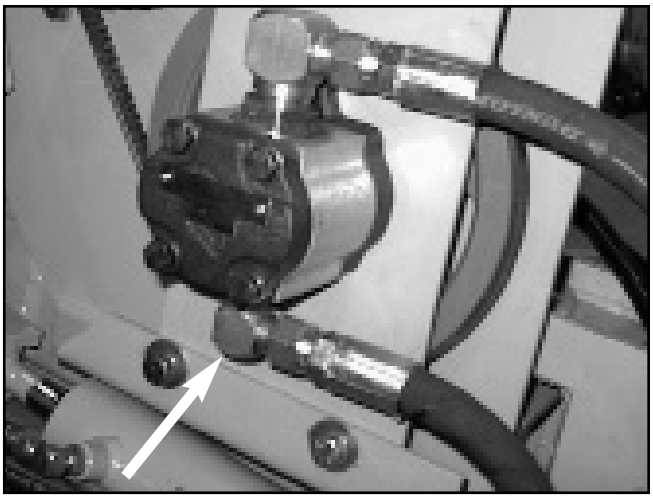

With the pressure gauge installed, the engine running at full throttle, and the cutting boom LEFT/RIGHT motion speed control valve fully closed, perform the cutting wheel checks shown in the following Hydraulic System Pressure Checks chart.

Hydraulic System Pressure Checks	
ACTION	**GAUGE READING**
Fully swing cutting wheel to RIGHT	2800 to 3000 PSI
Fully swing cutting wheel to LEFT	2800 to 3000 PSI
Fully extend steer OUT	2800 to 3000 PSI
Fully extend steer IN	2800 to 3000 PSI
Fully depress cutting wheel DOWN	2800 to 3000 PSI
Fully raise cutting wheel UP	2800 to 3000 PSI
Drive machine in full REVERSE	2800 to 3000 PSI
Drive machine in full FORWARD	2800 to 3000 PSI

* The self-propel drive motor output shaft must be held from rotating during REVERSE and FORWARD pressure checks.

These checks are an aid to verifying the integrity of the hydraulic cylinder and hydraulic motor seals, and the control valves. If all of the checks result in lower than proper gauge readings, the control valve bank integral pressure relief valve may be out of adjustment or dirty.

Solutions

Adjust Integral Relief Valve

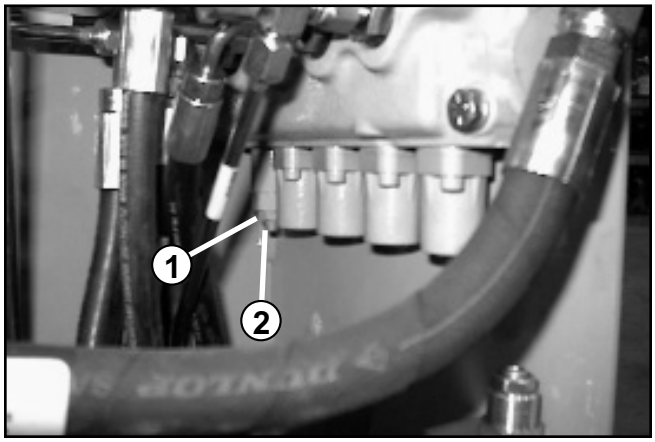

1. Referring to the above photograph, loosen the jam nut (1) with an open-end adjustable wrench.
2. Tighten or loosen the adjusting screw (2), using a 4 mm hex key (Allen wrench).
3. Check the pressure settings as directed in the Hydraulic System Pressure Checks chart.
4. Continue to tighten or loosen the adjusting screw and checking the pressure until it is within the acceptable range.
5. Retighten the jam nut.

Copyright © 2004 Rayco - All Rights Reserved
Printed in U.S.A.

Clean Integral Relief Valve

1. Turn off the engine and work all the controls back and forth to relieve internal pressure.
2. Disassemble the relief valve.
3. Clean with compressed air or a clean cloth.
4. Reassemble the relief valve.
5. Set the integral relief valve to the proper setting based on the Hydraulic System Pressure Checks chart.

NOTICE

Always use a pressure gauge when resetting the relief valve. A pressure setting greater than specified can reduce the life of the hydraulic motor and pump.

If a lower than acceptable reading is observed in fewer than all of the hydraulic circuits, first find out if the problem is in the valve. This may be accomplished by moving the valve hoses to a different valve which is known to be functioning properly. Switch (one at a time to avoid mix-up) hoses between the suspected defective hydraulic component or control valve and a known good control valve, and repeat the test.

If switching hoses to another valve produces satisfactory pressure readings, then the control valve seals are worn or damaged and should be replaced.

NOTICE

The valve chambers and spools are matched items and are not interchangeable. Be careful not to switch a spool from one valve position with a spool from another.

If, however, switching hoses to a valve which is known to be functioning properly results in unsatisfactory pressure reading again, it is evident that the cylinder piston seal is worn or damaged and relieving fluid through the flaw.

Solution for Faulty Cylinder Piston Seal

The hydraulic cylinder seals should be replaced. Hydraulic cylinder rebuild kits are available from Rayco or your Rayco dealer.

Self-Propel Drive Counterbalance Valve Adjustments

NOTICE

Normally the counterbalance valve will always remain properly adjusted. Do not try to adjust unless it is obvious that it is out of adjustment, as good adjustment can be easily lost if an inexperienced person attempts to adjust it.

Symptom - Machine Over-speeds When Driving Forward Down Incline

Problem - Counterbalance Valve Out of Adjustment

Solution

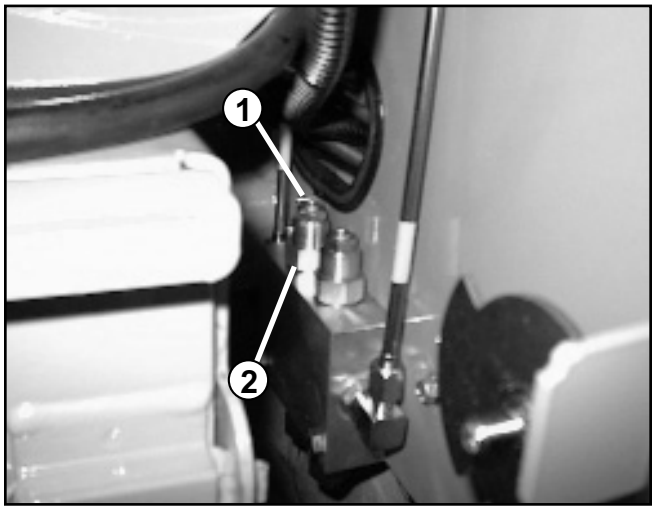

Use a 9/16" wrench or socket and a 5/32" hex key (Allen wrench) to perform the following adjustment.

1. Loosen the lock nut (2) on the adjustment screw (1) on the counterbalance valve.
2. Turn the adjustment screw (1) counterclockwise until the machine no longer over-speeds when driving in forward down an incline. (Do not tighten more than is necessary! To do so would cause the machine to travel too slowly when driving forward.)
3. Retighten the lock nut.

Copyright © 2004 Rayco - All Rights Reserved
Printed in U.S.A.

Symptom - Machine Over-speeds When Driving In Reverse Down Incline

Problem - Counterbalance Valve Out of Adjustment

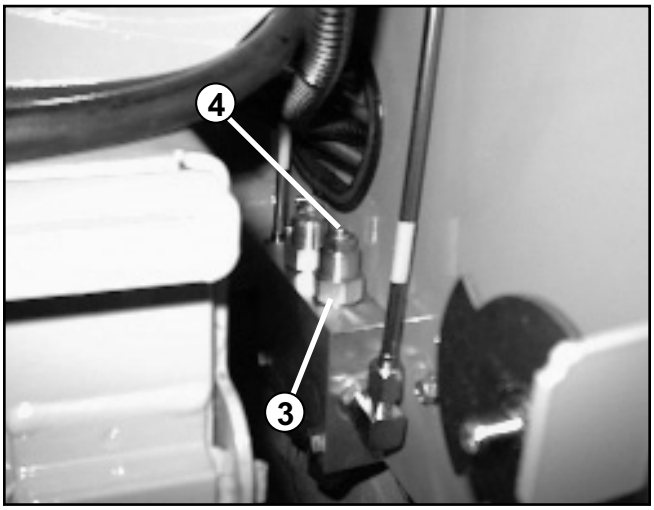

Solution

Use a 9/16" wrench or socket and a 5/32" hex key (Allen wrench) to perform the following adjustment.

1. Loosen the lock nut (3) on the adjustment screw (4) on the counterbalance valve.
2. Turn the adjustment screw (4) counterclockwise until the machine no longer over-speeds when driving in reverse down an incline. (Do not tighten more than is necessary! To do so would cause machine to travel too slowly when driving forward.)
3. Retighten the lock nut.

Symptom - Machine Too Slow When Driving Forward

Problem - Counterbalance Valve Out of Adjustment

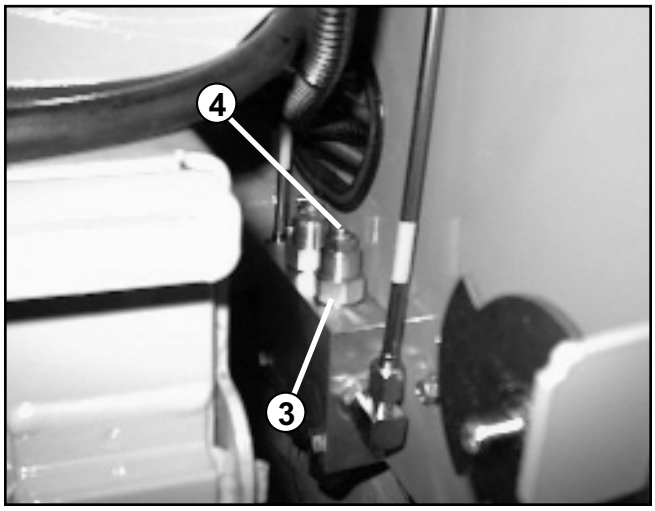

Solution

Use a 9/16" wrench or socket and a 5/32" hex key (Allen wrench) to perform the following adjustment.

1. Loosen the lock nut (3) on the adjustment screw (4) on the counterbalance valve.
2. Turn the adjustment screw (4) clockwise until the machine is no longer too slow when driving in reverse down an incline. (Do not loosen more than is necessary! To do so would cause machine to over-speed when driving forward down an incline. Test the machine in forward down an incline after making the above adjustment, and ensure the machine does not over-speed.)
3. Retighten the lock nut.

Copyright © 2004 Rayco - All Rights Reserved
Printed in U.S.A.

Symptom - Machine Too Slow When Driving In Reverse

Problem - Counterbalance Valve Out of Adjustment

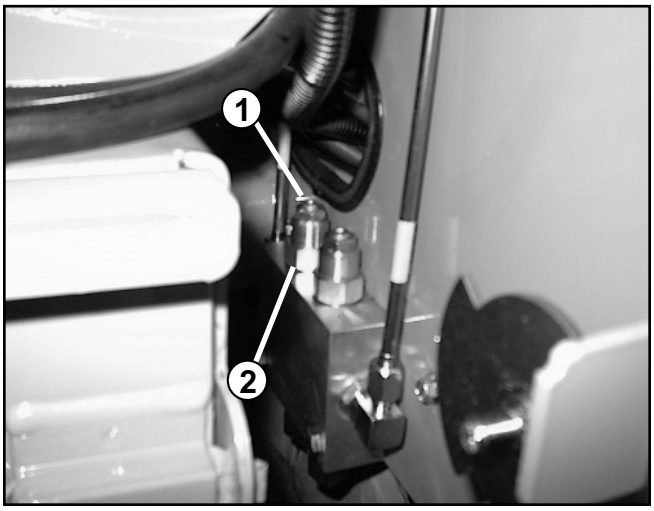

Solution

Use a 9/16" wrench or socket and a 5/32" hex key (Allen wrench) to perform the following adjustment.

1. Loosen the lock nut (2) on the adjustment screw (1) on the counterbalance valve.
2. Turn the adjustment screw (1) clockwise until the machine is no longer too slow when driving in reverse down an incline. (Do not loosen more than is necessary! To do so would cause machine to over-speed when driving in reverse down an incline. Test the machine on an incline after making the above adjustment, and ensure the machine does not over-speed.)
3. Retighten the lock nut.

Symptom - Self-Propel Wheels Too Slow When Driving Forward and In Reverse

Problem - Faulty Hydraulic Control Valve or Motor Seals

Test the machine:

Chock the ground drive wheels using a 4" x 4" board or cement blocks. Engage the self-propel engage pins, and push or pull the FORWARD/REVERSE lever. If the wheels rotate rapidly and drive the machine up and over the chock, the hydraulic drive motor is operating properly. If the wheels rotate slowly or not at all, the hydraulic motor may be leaking internally due to faulty seals.

If the control valve relief valve is properly set and if both counterbalance valve screws are not out of adjustment, test the hydraulic motor circuit.

A liquid-filled pressure gauge capable of withstanding up to 3000 PSI should be installed by inserting it into the lower fitting on the hydraulic pump. (See the photograph on page 38.)

With the pressure gauge installed and the engine running at full throttle, check the pressure in the circuit according to the chart on page 38.

If it is below the recommended range, first find out if the problem is in the valve. This may be accomplished by moving the valve hoses to a different valve which is known to be functioning properly. Switch hoses between the hydraulic motor control valve and a known good control valve, and repeat the test.

If switching hoses to another valve produces satisfactory pressure readings, then the control valve seals are worn or damaged and should be replaced.

NOTICE

The valve chambers and spools are matched items and are not interchangeable. Be careful not to switch a spool from one valve position with a spool from another.

If, however, switching hoses to a valve which is known to be functioning properly results in an unsatisfactory pressure reading again, it is evident that the hydraulic motor is leaking internally due to faulty seals.

Copyright © 2004 Rayco - All Rights Reserved
Printed in U.S.A.

Solution for Faulty Hydraulic Motor Seals

Remove the hydraulic drive motor and check the internal seals for leakage or damage. Seal kits are available from Rayco. Refer to the Parts manual.

Symptom - Cutter Boom Drifts Down

Problem - Overcenter Valve Out of Adjustment

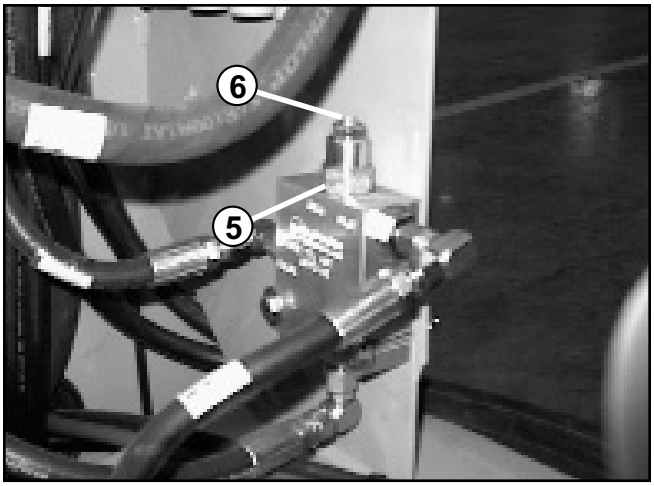

Solution

Use a 9/16” wrench or socket and a 5/32” hex key (Allen wrench) to perform the following adjustment.

1. Loosen the lock nut (5) on the adjustment screw (6) on the overcenter valve.
2. Turn the adjustment screw (4) clockwise until the boom no longer drifts. Do not loosen more than is necessary.
3. Retighten the lock nut.

Engine System

Symptom - Engine Starter Does Not Turn Over

Problem - Cutting Wheel rotation is turned ON

Solution

Make sure that the cutting wheel ON/OFF switch is in the OFF position (down) when starting the engine.

NOTICE

For other engine system symptoms, refer to the *Kohler Engine Operation Manual.*

Copyright © 2004 Rayco - All Rights Reserved
Printed in U.S.A.

HYDRAULIC SCHEMATIC

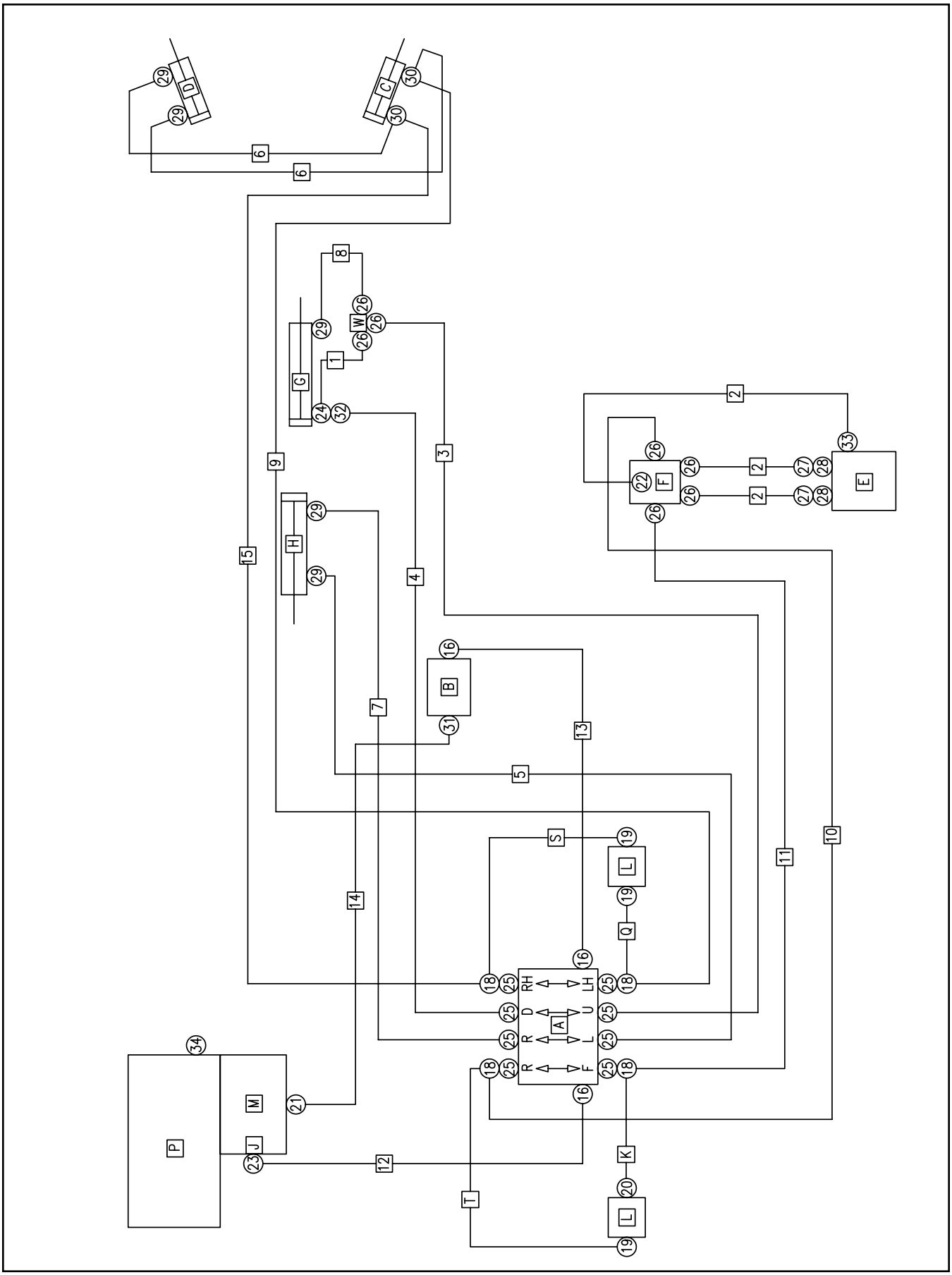

HYDRAULIC SCHEMATIC

ITEM #	PART #	DESCRIPTION	QTY.	INCLUDED IN
A	760567	VALVE - 4-SPOOL	1	12406
B	760115	HYDRAULIC OIL PUMP	1	"
C	REF	SWING CYLINDER - RH	1	"
D	REF	SWING CYLINDER - LH	1	"
E	762381	HYDRAULIC MOTOR W/BRAKE	1	"
F	762382	VALVE - COUNTER BALANCE W/SHUTTLE	1	"
G	REF	LIFT CYLINDER	1	"
H	REF	TELESCOPING TONGUE CYLINDER	1	"
J	761906	HYDRAULIC OIL FILTER	1	"
K	12661	TUBE - HYDRAULIC 1/4 OD	1	"
L	738008	FLOW CONTROL VALVE	2	"
M	REF	HYDRAULIC RESERVOIR	1	"
N	741011	HYDRAULIC HOSE KIT	1	"
P	REF	FUEL TANK	1	"
Q	12665	TUBE - HYDRAULIC 1/4 OD	1	"
R	761895	HYDRAULIC ADAPTER KIT	1	"
S	12667	TUBE - HYDRAULIC 1/4 OD	1	"
T	12662	TUBE - HYDRAULIC 1/4 OD	1	"
W	1200015	COUNTER BALANCE VALVE	1	"
1	REF.	4R2T-604-9"	1	741011
2	REF.	4R2T-604-22"	3	"
3	REF.	4R2T-604-664L-12"	1	"
4	REF.	4R2T-604-604-21"	1	"
5	REF.	4R2T-604-664-49"	1	"
6	REF.	4R2T-604-37"	2	"
7	REF.	4R2T-604-664L-53"	1	"
8	REF.	4R2T-604-14"	1	"
9	REF.	4R2T-604-684-52"	1	"
10	REF.	4R2T-604-19"	1	"
11	REF.	4R2T-604-664-21"	1	"
12	REF.	8R2T-608-13"	1	"
13	REF.	8R2T-608-47"	1	"
14	REF.	8R2T-608-40"	1	"
15	REF.	4R2T-604-52"	1	"
16	REF.	6801-08, ELBOW-90D-8MJIC X -8MAOR	3	761895
18	REF.	6602-04-04-04, SWIVEL TEE-4FJIC X -4MJIC X -4MJIC	4	"
19	REF.	2501-04-04, ELBOW-90D -4MJIC X -4MP	3	"
20	REF.	2404-04-04, ADAPTOR- 4MP X -4MJIC	1	"
21	REF.	2501-L-08, LONG EL90D -8MJIC X -8MP	1	"
22	750713	6400-04-04, ADAPTOR-4MJIC X -4MOR	1	"
23	REF.	6400-08, ADAPTOR - 8MJIC x -8MOR	1	"
24	REF.	6804-04-04-04 TEE 4MORB X 4MJIC S 4MJIC	1	"
25	REF.	6400-04-06, ADAPTOR-4MJIC X -6MORB	8	"
26	REF.	6801-04-06, ELBOW-90D-4MJIC X -6MAOR	7	"
27	REF.	6802-04-06, ELBOW-45D -4MJIC X-6MOR	2	"
28	REF.	6410-10-06, ADAPTOR-10MOR-6FOR	2	"
29	REF.	6801-04, ELBOW-90D-4MJIC X -4MAOR	5	"
30	REF.	6803-04-04-04, TEE-4MORB X-4MJICX-4MJIC	2	"
31	REF.	6801-08-12, ELBOW-90D-8MJIC X -12MAOR	1	"
32	REF.	6500-04-04, ELBOW-90D -4FJIC X 4MJIC	1	"
33	REF.	6802-04-04, ELBOW -45D-4MJIC-4MOR	1	"
34	REF.	139-44, BARB-HOSE MP -4 X -4	1	"
35	1503-2-2	ELBOW-45D 2MP-2FPX	1	"

SERVICE PARTS - QUICK REFERENCE

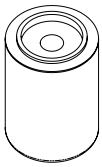

ENGINE OIL FILTER
750117

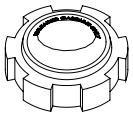

FUEL CAP
761755

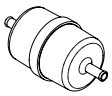

IN LINE FUEL FILTER
750241

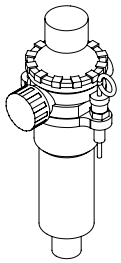

HYDRAULIC
RETURN FILTER
761906

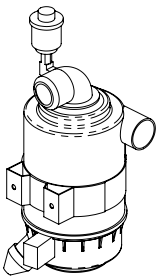

INNER
AIR FILTER
ELEMENT
761397

OUTER AIR FILTER
ELEMENT
780270

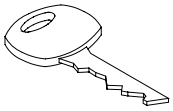

ENGINE KEY
755553

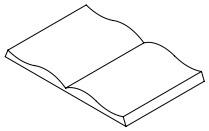

1625A MANUALS
780376 / 780377
780378

Copyright © 2004 Rayco - All Rights Reserved
Printed in U.S.A.

Specifications

General

Weight	1300 lbs (590 kg)
Length	105.5" (268 cm)
Height	48-1/2" (123 cm)
Width	34-1/2" (88 cm) or 46" (117 cm) w/ optional dual wheels
Chip collection capacity	10.5 cubic feet (.30 cubic meters)
Chassis design	Electrically welded 3" x 3", 4" x 4" 7.6 cm x 7.6 cm, 10 cm x 10 cm) square steel tubing
Tires (4)	5.70" x 8" (14.2 cm x 20 cm) extra gripping deep tread
Fenders	Steel bolt-on type
Drive axle bearings	Flange type, w/ grease fitting
Self-propel means	Hydraulic motor
Swing pivot bearings	1" (2.54 cm)spherical bearing
Crucial cylinder pivot points	Replaceable hardened bushings
Tool storage	Slide-out drawer

Engine

Model	Kohler Command 25 hp ohv v-twin
Number of cylinders	2
Bore	3.27" (83 mm)
Stroke	2.64" (67 mm)
Displacement	44 cubic inches (725 cc)
Maximum no-load speed	3600 rpm
Gross power at 3600 rpm	25 HP (18.4 kw)
Max rated torque at 2800 rpm	39.5 ft-lbs (.53 Nm)
Valves	Overhead design
Cooling medium	Unrestricted air flow
Air cleaner	Dual element, dry type
Oil filter	Full flow type
Automatic protective shutdown	Low oil pressure
Fuel tank capacity	6-1/2 gallons (24.6 liters)
Electrical system	12 Volt /15 amp alternator

Copyright © 2004 Rayco - All Rights Reserved
Printed in U.S.A.

Hydraulic System

Pump displacement .....365 cubic in. (5.5 cc) /revolution
Pump gallonage at 3600 rpm engine speed.....1.8 gpm (10.8 liter/minute)
System pressure relief.....2,800 psi (19.3 MPa)
Oil reservoir capacity.....2 gallons (7.6 liters)
Oil level visible through tank
Oil filter.....10 micron full flow
Oil type .....SAE 10
Operator control console .....Rigidly mounted to chassis
Operator control valves .....4 function monoblock, fingertip control, spring-centering
Hose capacities
1/4" (.63 cm) I.D. .....5,000 psi (34 MPa) operating, 20,000 psi (138 MPa) surge
1/2" (1.3 cm) I.D. .....3,500 psi (24 MPa) operating, 14,005 psi (97 MPa) surge
Hose fittings.....JIC and SAE O-ring type
Cross-travel cylinders (2) .....2" (5.1 cm) bore x 4" (10.2 cm) stroke, 3/4" (1.9 cm) dia. rod
Lift cylinder.....2" (5.1 cm) bore x 12" (30.5 cm) stroke, 1" (2.5 cm) dia. rod
Steer cylinder .....2" (5.1 cm) bore x 4" (10.2 cm) stroke, 3/4" (1.9 cm) dia. rod
Hydraulic drive motor .....9.6 cubic inches (157 cc) / rev., dual counterbalance valve w/brake

Cutting wheel

Wheel diameter .....17.25" (43.8 cm)
Wheel thickness .....1/2" (1.3 cm)
Cutting wheel bearings .....1-1/2" (3.8 cm) dia. pillow block type
Cutting wheel hub .....Bolt-on design
Speed .....1140 rpm (approximately)
Drive belt .....Gates PolyChain® GT® low maintenance
Drive belt tension .....Convenient wrench access
Intermediate belt .....Banded “A” section V-belt
Jackshaft bearings (2) .....1-1/2" (3.8 cm) dia. pillow block type
Cutting teeth (18) .....Rayco Supertooth™ forged, one pc., w/tungsten carbide tips
Belt guards.....Metal, with access panel
Chip retaining curtains .....Fabric-impregnated rubber
Cutting wheel engage/disengage .....Electromagnetic clutch w/brake

Cutting range (without repositioning)

Below ground level .....11" (28.0 cm)
Above ground level.....26" (66 cm)
Cutting width.....39" (99 cm)

Options

Spark-arresting muffler
Additional chip retainers
Dual removable travel wheels
Command Cut Kit
Ramp
Custom trailer

EC Specifications

Operator Ear Sound Pressure (db A-weighted) 92
Operator Controls Vibration (meter/sec2) RMS 10

Copyright © 2004 Rayco - All Rights Reserved
Printed in U.S.A.

RAYCO WARRANTY CERTIFICATE

A. General Outline

Rayco Manufacturing, Inc. warrants to the first user that the products it supplies will be free from defects in material and workmanship under normal and proper usage for a period of 365 days from the date of delivery to the first user. In addition, with respect to "Mini Work-Force" models, the mainframe and control bar will be free from defects in material and workmanship under normal and proper usage for a period of two (2) years from said date of delivery.

This warranty does not cover and Rayco makes no warranties with respect to (i) any product that has been subject to abuse, misuse, misapplication, neglect, alteration or accident; to improper or incorrect repair or maintenance; or to abnormal conditions of use, temperature, moisture, dirt or corrosive matter; and (ii) any material, parts or other components that are manufactured by someone other than Rayco, which items carry only the manufacturer's warranty, if any. Furthermore, this warranty does not cover expendable parts.

Individual components such as engines, engine drive systems, batteries, and hydraulic components, etc. shall be covered by standard warranties of their respective manufacturers. Any claims must be submitted within 30 days of the repair.

B. Individual Components

1. Engines

   All engines have specific warranties issued by OEM and honored thru their respective dealer.

2. Hydraulic Components

   Hydraulic components have variable warranties. Rayco must preauthorize all hydraulic component product warranties prior to removal from the machine, and all warranty considerations are the sole responsibility of the manufacturer.

3. Batteries

   Batteries have a warranty that is honored thru manufacturer. For warranty service, the purchaser is to contact manufacturer directly.

4. Various Components

   A. Belts will be covered under warranty only if Rayco receives warranty from their supplier.

   B. Sprockets Sheaves have a six month limited warranty.

   C. Electric clutches have a six month limited warranty.

   D. Hydraulic Cylinders will be covered under warranty only if Rayco receives warranty from their supplier.

5. Pockets and Teeth

   Pockets and Teeth will be covered under warranty only if they are defective before they are mounted on a stump grinder. Once they are used, all warranty stops.

C. Items not Covered

Rayco is not responsible for the following:

1. Premiums charged for overtime labor requested by the purchaser.
2. Transporting the product to and from the place at which warranty work is performed.
3. Any product that has been altered or modified in ways not approved by Rayco.
4. Depreciation or damage caused by normal wear, lack of reasonable and proper maintenance, failure to follow operating instructions, misuse, lack of proper protection during storage, or accident.

D. Unapproved Service or modification

Rayco is relieved of its obligation under this warranty if:

1. Service (other than normal maintenance and replacement of service items) is performed by someone other than an authorized Rayco dealer; or
2. The product is modified or altered in ways not approved by Rayco.

E. Obtaining Warranty Service

To obtain performance of this warranty, the original retail purchaser must request warranty service from a Rayco dealer authorized to sell the product to be serviced. When making such a request, the purchaser must present evidence of the product's delivery date, make the product available at the dealer's place of business, and inform the dealer in what way the purchaser believes the product to be defective.

Warranty repairs can be made in the field if the purchaser and servicing dealer so desire. However, travel time expense to and from the job site will be purchaser or dealer responsibility.

F. No Implied Warranty or Other Representation

Where permitted by law, neither Rayco nor any company affiliated with it makes any warranties, representations or promises, expressed or implied, as to the quality or performance, or freedom from defect of its products other than those set forth above, and NO IMPLIED WARRANTY OF MERCHANTABILITY OR FITNESS IS MADE.

G. Limitation of Purchaser's Remedies

Where permitted by law, the purchaser's only remedies in connection with the branch of performance on any warranty on any Rayco product are those set forth on this page. In no event will the dealer and or Rayco be liable for incidental or consequential damages, including but not limited to: loss of profits, rental of substitute equipment, or other commercial loss.

H. No Dealer Warranty

The selling dealer makes no warranty of his own on any item warranted by Rayco, and makes no warranty on other items unless he delivers to the purchaser a separate written warranty certificate specially warranting the item. A dealer has no authority to make any representation to promise on behalf of Rayco, or to modify the terms or limitations of this warranty in any way.

If you have a situation where you are not sure if a component is covered under warranty, please do not hesitate to contact us. Rayco wants you and your customer to be 100% satisfied with our products and service.

CALIFORNIA

Proposition 65 Warning

Diesel engine exhaust and some of its constituents are known to the state of California to cause cancer, birth defects, and other reproductive harm.

RAYCO® MANUFACTURING, INC.

Warranty / Service Bulletin

Bulletin#115
July 16, 2004

SUBJECT: RG1625A, RG1631 HOSE KIT

Rayco Mfg. has determined that the RG1625A and the RG1631 may show symptoms of poor wheel drive power or a hydraulic growling noise when driving the machine. It is caused by fluid restrictions in the steel lines from the valve bank to the dual counterbalance valve block. To resolve this problem we will provide to our dealers the replacement rubber hoses we need to have you replace these steel lines with.

Please fill out a warranty claim form if the machine is still within its warranty period. Warranty time allowance for this will be 1 hour to replace the hoses and bleed the brake line.

Contact our parts department to request part numbers 763339 and 763340 for any machines that exhibit the mentioned condition. Any questions, please call our service department at 800-392-2686.

Earl Gress
Service Manager

At point of sale, a Warranty Registration must be filled out and signed by the purchaser to place in effect the Rayco Manufacturing Inc. new machine warranty.

Failure to submit this registration will void any warranty consideration on this machine.

Failure to respond to this service / warranty bulletin may void future warranty consideration.

RAYCO®
MANUFACTURING, INC.

Warranty / Service Bulletin

Bulletin#116
July 30, 2004

SUBJECT: RG1625A, RG1631

Rayco Mfg. has determined that the RG1625A and the RG1631 may experience early bearing failures on electric clutches under certain operating conditions. In order to prolong the life of the clutch bearings we are beginning to install a dust cover to prevent debris from entering the bearings.

We are currently installing the dust covers on new production machines. We also will provide them with every replacement clutch sold through the parts department as soon as they become available. Please check your inventory on 761699 and SP7359 clutches and new machine inventory that use these clutches and contact our parts department to request the dust cover kit 14495, for your stock.

Installation of the dust cover on machines in the field may not improve bearing life and will be left to the discretion of each dealer. With any questions, please contact our service department at 800-392-2686.

Earl Gress
Service Manager

At point of sale, a Warranty Registration must be filled out and signed by the purchaser to place in effect the Rayco Manufacturing Inc. new machine warranty.

Failure to submit this registration will void any warranty consideration on this machine.

Failure to respond to this service / warranty bulletin may void future warranty consideration.

At point of sale, a Warranty Registration must be filled out and signed by the purchaser to place in effect the Rayco Manufacturing Inc. new machine warranty.

Failure to submit this registration will void any warranty consideration on this machine.

Failure to respond to this service / warranty bulletin may void future warranty consideration

WARRANTY/SERVICE BULLETIN

Bulletin#119
December 14, 2004

TO: ALL AUTHORIZED RAYCO DEALERS

SUBJECT: RG1625A & RG1631 WHEEL DRIVE BRAKE TEST

RG1625A SERIAL # 1R91009143W210145 AND UP
RG1631 SERIAL # 1R911091X4M210001 AND UP

The above-mentioned machines are required to have a daily inspection of the ground-drive brake. The operator should do this check every day, before using the machine. The ground-drive brake on these machines is a spring-activated, hydraulically released unit. This means that anytime the unit is not being moved with hydraulic pressure, the spring-applied brake should engage. The machine should never visibly “creep” when it is not being moved.

The machine can be tested on any slope, but the simplest inspection can be done when unloading or loading the machine onto its trailer, or into a pickup truck. When the drive wheels are on the ramps, bring the machine to a halt, and observe the drive wheels. The wheels should not turn at all. No “creep” should be evident.

If the machine can be observed to be creeping down the ramp, check the following items:

- Both drive wheels are engaged.
- Wheel drive chain is properly tensioned.
- No oil leaks are present in the ground-drive circuit.

Correct all of these items and retest the machine. If the machine still creeps, then the spring-activated brake has been damaged. The drive motor must be

replaced. Failure to keep the ground-drive brake in working condition can result in a machine moving unexpectedly, causing injury or death. The machine must be taken out of service until the ground-drive motor is repaired / replaced.

If you have any questions please call Rayco Mfg. at 1(800) 392-2686 to speak to our service or warranty department.

Thank you,

Earl Gress,
Rayco Service Manager

At point of sale, a Warranty Registration must be filled out and signed by the purchaser to place in effect the Rayco Manufacturing Inc. new machine warranty.

Failure to submit this registration will void any warranty consideration on this machine.

Failure to respond to this service / warranty bulletin may void future warranty consideration

RAYCO®
MANUFACTURING, INC.

Warranty / Service Bulletin

Bulletin#121
Date December 23, 2004

TO ALL AUTHORIZED RAYCO DEALERS

RG1631 STUMP CUTTER ENGINE OIL SPEC CHANGE
SERIAL # 1R911091X4M21001 TO 1R91109185M210063

Vanguard Engine has recommended a change in the engine oil spec on the above mention machine. The RG1631s that fall within the serial numbers shown above were factory filled with a straight viscosity 30-weight engine oil, and are now being factory filled with 10w30 multi-viscosity oil. All dealer stock and customer machines need to be changed over to 10w30 or 5w30 engine oil and a new decal installed (part # 4989) to replace the existing one on the machine. If you have any question regarding this service bulletin please call our service department @ 1-800-392-2686.

Thank you,

Earl Gress
Service Manager

At point of sale, a Warranty Registration must be filled out and signed by the purchaser to place in effect the Rayco Manufacturing Inc. new machine warranty.

Failure to submit this registration will void any warranty consideration on this machine.

Failure to respond to this service / warranty bulletin may void future warranty consideration



RAYCO* Manufacturing, Inc.** is recognized as the industry leader in environmental equipment. Since 1978 ***RAYCO has continued to "Set the Industry Standard" with new and innovative features and designs.

Engineering is done in house by our highly trained staff of professionals using cutting edge technology.

Our worldwide dealer network provides product training and support by professionals who care about you and your business.

Think smart think safe……

We care about your safety. When operating your *RAYCO* machinery always wear an approved helmet complete with ear muffs, face shield and the proper eyewear. Never operate under the influence of alcohol or drugs. Know your *RAYCO*, read and understand your owner's manual from cover to cover.

RAYCO

4255 East Lincoln Way
Wooster, Ohio 44691-8601 U.S.A.
800.392.2686 (U.S. or Canada Only)
Fax 330.264.3697 • E-mail rayco@raycomfg.com

Copy Right @ 2007 *RAYCO* - All Rights Reserved
Printed in U.S.A.

Index 780377